Distribuitor direct NORELEM pentru Romania: Best TOOLS SRL
info@btools.ro | 0368.412.413 | www.btools.ro

96990-10
Page 1261

Acrylic glass panels

96990-12
Page 1262

Basic modules

96990-13
Page 1263

Round bars

96990-15
Page 1264

HYGIENEshield Premium

Lubricants
Adhesives
Grease nipples

97900
Page 1266

Klüber "Quietsch-Ex"

97901
Page 1266

Klüber lubricating paste

97903
Page 1267

Klüber copper paste
lead-free

97905
Page 1267

Klüber safety lubricating grease

97907
Page 1268

Klüber molybdenum disulphide lubricant

97907-10
Page 1269

Lubricating greases

97920
Page 1270

Klüber bonded coating
UNIMOLY C 220

97930
Page 1271

Ballistol all-purpose oil
in food industry quality

97940
Page 1272

Grease nipples
conical head DIN 71412

97941
Page 1274

Grease nipple caps
for conical grease nipples

97942
Page 1275

Grease nipples
flush type, DIN 3405

97944
Page 1276

Grease nipples
button head DIN 3404

97950
Page 1277

Grease nipple assortment box, steel

97990
Page 1278

LOCTITE liquid epoxy metals

New/Expanded Items

97990
Page 1278

LOCTITE liquid epoxy metals

97990
Page 1279

LOCTITE threadlocker

97990
Page 1280

LOCTITE universal adhesive

97990
Page 1281

LOCTITE thread sealant

97990
Page 1282

LOCTITE flange sealant

97990
Page 1283

LOCTITE adhesive and sealant

97990
Page 1284

LOCTITE retaining compound

97990
Page 1285

LOCTITE cleaner

97990
Page 1286

LOCTITE activators

97990
Page 1286

Application equipment

97990-10
Page 1287

Push-type grease guns

97990-11
Page 1288

DIN 1283 grease guns

97990-12
Page 1289

Grease guns, one-hand operation, similar to DIN 1283

97990-13
Page 1290

Grease guns, two-hand operation

97990-15
Page 1291

Grease gun mouthpieces, steel

97990-16
Page 1292

Reinforced hoses for DIN 1283 grease guns

97990-30
Page 1293

Pump spray bottles

New/Expanded Items

97000

Lubricants
Adhesives
Grease nipples

Distribuitor direct NORELEM pentru Romania: Best TOOLS SRL
info@btools.ro | 0368.412.413 | www.btools.ro

Klüber "Quietsch-Ex"

Sample order:
nlm 97900-250

Safety:
Safety information is available on our internet site.

Description:
"Quietsch-Ex" (no squeak) the universal lubricant for industry, home, garden, automobile, motorbike, hobby and sport.

Application:
Approved for lubricating bearings, slides, chains, locks and hinges.
Cleaning and lubricating oil for the motorbike and to protect machines, equipment, tools and vehicles, etc., from corrosion, e.g. in winter.
It is particularly good for machines and equipment, which are often used outdoors in all weathers.
Rusty screws, hinges and bolts that are rusted solid can be loosened or moved again without destroying them.

Advantages:
Lubricates, repels moisture, counteracts corrosion, improves sliding, loosens rust, protects from freezing and is also good for sawing and drilling.
It penetrates into the smallest gap and reaches every accessible friction point.

Order No.	Container	Viscosity class
97900-250	250 ml spray	ISO VG 32

97901

Klüber lubricating paste

Sample order:
nlm 97901-060

Safety:
Safety information is available on our internet site.

Description:
Klüber 46 MR 401 paste is a white multi-purpose lubricating paste, which provides very high reliability against friction, wear and friction rust.

Application:
Approved as a lubricant for long-term and lifetime lubrication, as an assembly aid and a thread lubricant for CrNi fastenings. Kluber paste is an assembly aid for press fits, it also brings advantages and safety anywhere that low sliding speeds, very high pressures, high wear, stick-slip, oscillating movements, vibrations and tribocorrosion occur.
Preferred uses are by low sliding speeds, screw spindles, adjustment nuts, splined shafts, ball joints, pivot bearings, gear wheels, radial packing rings, O-ring seals, V-rings, elastic rubber collars and roller bearings.

Advantages:
Protects from corrosion, is water-resistant, actively adhesive and is neutral to non-ferrous metals. Due to the white colour, which after appliance forms an almost invisible highly efficient lubricating film, it is particularly suited for places in which dark pastes are undesirable for visual reasons and cleanliness is required.

Order No.	Container	Working temperature	NLGI Class
97901-060	60 g tube	-40 °C to 150 °C	1
97901-750	750 g can	-40 °C to 150 °C	1

norelem

Distribuitor direct NORELEM pentru Romania: Best TOOLS SRL
info@btools.ro | 0368.412.413 | www.btools.ro

Klüber copper paste

lead-free

Description:
The copper paste “Wolfracoat C” is a metallic paste for temperatures up to 1200 °C.

Application:
A proven assembly, cutting, lubricating and fastener paste for plain bearings and slide points, chains, roller bearings, in foundries for cores and ejectors, in die-casting machines, exhaust systems of internal combustion engines and furnaces.

Advantages:
The synthetic base oil evaporates at over 200 °C. A dry, metallic lubricant film gradually forms. Good lubrication of friction points with slide and rolling friction, good separation and lubrication for fastenings with static and dynamic friction, improved sliding for easy assembly of interference and transition fits, easy dismantling when loosening screw fastenings.

Sample order:
nlm 97903-400

Safety:
Safety information is available on our internet site.

Order No.	Container	Working temperature	NLGI Class
97903-060	60 g tube	-30 °C to 1200 °C, over 200 °C is a dry lubricant	2
97903-400	400 ml spray	-30 °C to 1200 °C, over 200 °C is a dry lubricant	2

97905

Klüber safety lubricating grease

Description:
The safety grease “Microlube GL 261” is a lubricant for high loads at low and high temperatures.

Application:
Lubricating grease for roller and plain bearings, sprockets, gear racks, small gears, adjustment gears, hoists and winches, roller guides, cams and cam plates.
Sealing and lubricating grease for oil and grease-resistant rubber seals such as radial packing rings, O-rings, cylinder and piston seals in pneumatics, rotary shaft lip seals (shaft seals), plastics, slide rails, sunroofs and seat rails.
Anticorrosive grease for bare metal parts, locks, fastening systems, ship fittings, antennas, battery poles and to counter saltwater corrosion.

Advantages:
The combination of ingredients in MICROLUBE increase the metallic surface contact area by micro-slide friction. This wear-free smoothing (friction-point tempering) counteracts corrosion and fitting rust.

Sample order:
nlm 97905-250

Safety:
Safety information is available on our internet site.

Order No.	Container	Working temperature	NLGI Class	Rev. characteristic n x dm
97905-250	250 ml spray	-30 °C to 140 °C	1	3X100000
97905-400	400 g cartridge	-30 °C to 140 °C	1	3X100000

Distribuitor direct NORELEM pentru Romania: Best TOOLS SRL
info@btools.ro | 0368.412.413 | www.btools.ro

Klüber molybdenum disulphide lubricant

Description:
The molybdenum disulphide lubricant UNIMOLY GL 82 is a lubricating grease with MoS2 for improved fail-safe performance.

Application:
Proven use with roller and plain bearings, slide rails and guides, cams and cam plates, bolts, joints, hinges, cardan shafts, gear racks, screw spindles in all machine and plant construction.
A proven lubricant for wheel bearings and a multi-purpose lubricant for king pins, track and rod joints, cardan shafts and spline shafts.

Advantages:
Contains molybdenum disulphide (MoS2) for improved wear protection by boundary lubrication, waterproof and corrosion preventive.
Based on automobile manufacturers‘ requirements.

Sample order:
nlm 97907-1000

Safety:
Safety information is available on our internet site.

Order No.	Container	Working temperature	NLGI Class	Rev. characteristic n x dm
97907-0400	400 g cartridge	-20 °C to 130 °C	2	5X100000
97907-1000	1 kg can	-20 °C to 130 °C	2	5X100000

Notes

norelem

Distribuitor direct NORELEM pentru Romania: Best TOOLS SRL
info@btools.ro | 0368.412.413 | www.btools.ro

Lubricating greases

Sample order:
nlm 97907-10-20400

Description:
General: multi-purpose grease for lubricating plain and rolling bearings with a high load.

Multi-purpose grease 97907-10-10400:
For lubricating plain, rolling and spherical bearings, splined shafts, quick-release axles, threaded spindles and sliding surfaces of all types with a normal load and at all glide velocities that are usual for lubrication. Waterproof and free from acid. Labelling acc. to DIN 51502 K2K-30.

High-temperature grease 97907-10-20400:
For lubricating plain and rolling bearings with high temperatures, e.g. in paint curing ovens, industrial dryers, smelting converters, casting ladles, heating systems, hot-air fans, charging cranes, vulcanisation systems or electric motors. Labelling acc. to DIN 51502 KP2N-30.

Multi-purpose grease 97907-10-10500:
For lubricating rolling and plain bearings with a high load. Lubricating grease for vehicles, construction machines and agricultural machines.
Worked penetration: 265–295 1/10 mm
Water resistance: DIN ISO 51807/T1, 1–90
Corrosion protection: DIN 51802, degree of corrosion 0
Soap basis: LI-12-hydroxystearate
Base oil viscosity at 40°C: DIN 51562, ca. 135 mm^2/s
Suitable for two-hand grease guns.

Order No.	Item	Container	Working temperature	NLGI Class	Dropping point °C
97907-10-10400	Multi-purpose grease	400 g DIN 1284 grease cartridge	-30 °C to 120 °C	2	>190
97907-10-20400	High-temperature grease	400 g DIN 1284 grease cartridge	-35 °C to 150 °C	2	>220
97907-10-10500	Multi-purpose grease	500 g screw-in cartridge	-30 °C to 120 °C	2	180

Distribuitor direct NORELEM pentru Romania: Best TOOLS SRL
info@btools.ro | 0368.412.413 | www.btools.ro

Klüber bonded coating

UNIMOLY C 220

Description:
Bonded coatings consist of a solid lubricant, bonding agent and solvent. After it has been applied and dried, the bonded coating forms a thin lubricating layer that reduces friction and wear. It is dry, adheres firmly to the surface and cannot drip.

Application:
For dry lubricating under high loads, oscillating movements or to counter stick-slip. For lifetime lubrication of screw spindles, hinge pins, cylinder pins and during assembly. Improves wear on gearwheels and sprockets, reduces friction on cap screws.

Advantages:
Dry lubricants cannot drip, therefore a pollution of the environment, as by oil or grease-based lubricants, can be excluded.

Sample order:
nlm 97920-400

Safety:
Safety information is available on our internet site.

Order No.	Container	Working temperature	Water Hazard Class
97920-400	400 ml aerosol	-180 °C to 450 °C	WGK 2

Distribuitor direct NORELEM pentru Romania: Best TOOLS SRL
info@btools.ro | 0368.412.413 | www.btools.ro

Ballistol all-purpose oil

in food industry quality

Sample order:
nlm 97930-100200

Note:
Ballistol all-purpose oil is approved in the foodstuff industry for product contact surfaces. All Ballistol components are biodegradable and harmless to the environment.
It is skin-friendly and completely harmless if accidentally swallowed.
As spray without CFC.

Safety:
Safety information is available on our internet site.

Description:
Ballistol as a high-quality special oil combines anti-rust, lubricating oil, maintenance and cleaning agent with high creep-ability and disinfection power all in one.

Application:
The all-purpose oil is used versatilely in machine and tool manufacturing, for the fabrication and maintenance of precision devices, scales and in light engineering.
Due to its high pharmaceutical quality, it is outstandingly suited for the foods processing sector.
It finds multiple use in industrial art, industry, agriculture, housekeeping, garden, for automobiles, fishing, hunting and shooting, in the maintenance of metal, wood, plastic, leather, rubber, skin, fur and much more.

Advantages:
Due to its low surface tension and terrific creep ability, it penetrates into the narrowest nooks and finest cracks.
Ballistol forms an alkaline protective film on metals, neutralises hand sweat and other acidic rust promoting residues and thus protects against corrosion.
Its oil base is medicinally clean white oil. It is non-ageing and does not resinify ven after years.

Storage:
The packaging is tightly sealed, indefinitely durable.

Order No.	Container
97930-100200	200 ml aerosol
97930-100400	400 ml aerosol
97930-205000	5 litre liquid canister

Distribuitor direct NORELEM pentru Romania: Best TOOLS SRL
info@btools.ro | 0368.412.413 | www.btools.ro

Grease nipples

conical head DIN 71412

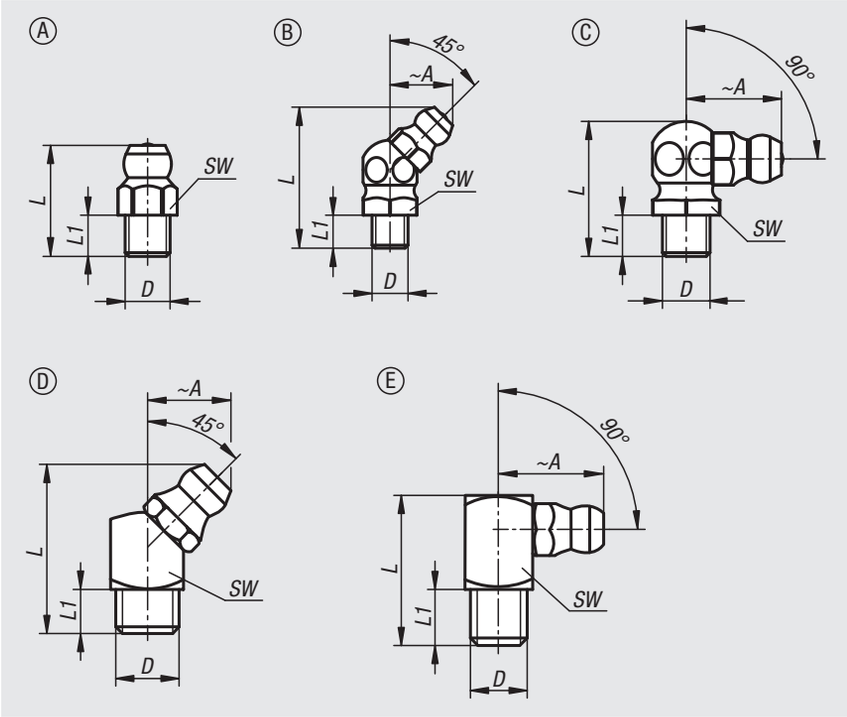

Material:
Steel or 1.4305 stainless steel

Version:
Steel hardened, min. 550 HV 1, electro zinc-plated.
Stainless steel bright.

Sample order:
nlm 97940-1106100

Note:
The conical head grease nipples have a tapered thread. They are suitable for grease points which must be lubricated often and reliably. Their versatility makes them the most widespread type of grease nipple.

Form A, straight

Order No. steel	Order No. stainless steel	Form	D	L	L1	SW
97940-1106100	97940-2106100	A	M6x1	15	5,5	7
97940-1108100	97940-2108100	A	M8x1	15	5,5	9
97940-1108125	97940-2108125	A	M8x1,25	15	5,5	9
97940-1110100	97940-2110100	A	M10x1	15	5,5	11
97940-1110150	97940-2110150	A	M10x1,5	15	5,5	11
97940-1118	97940-2118	A	R1/8	15	5,5	11
97940-1114	97940-2114	A	R1/4	17,5	6,5	14

Form B, 45°, hexagonal

Order No. steel	Order No. stainless steel	Form	A	D	L	L1	SW
97940-1206100	97940-2206100	B	10,5	M6x1	23,5	5,5	9
97940-1208100	97940-2208100	B	10,5	M8x1	23,5	5,5	9
97940-1208125	97940-2208125	B	10,5	M8x1,25	23,5	5,5	9
97940-1210100	97940-2210100	B	11,5	M10x1	25	5,5	11
97940-1210150	97940-2210150	B	11,5	M10x1,5	25	5,5	11
97940-1218	97940-2218	B	11,5	R1/8	25	5,5	11
97940-1214	97940-2214	B	12	R1/4	22,5	6,5	14

Distribuitor direct NORELEM pentru Romania: Best TOOLS SRL
info@btools.ro | 0368.412.413 | www.btools.ro

Grease nipples

conical head DIN 71412

Form C, 90°, hexagonal

Order No. steel	Order No. stainless steel	Form	A	D	L	L1	SW
97940-1306100	**97940-2306100**	C	13	M6x1	18	5,5	9
97940-1308100	**97940-2308100**	C	13	M8x1	18	5,5	9
97940-1308125	**97940-2308125**	C	13	M8x1,25	18	5,5	9
97940-1310100	**97940-2310100**	C	14	M10x1	20	5,5	11
97940-1310150	**97940-2310150**	C	14	M10x1,5	20	5,5	11
97940-1318	**97940-2318**	C	14	R1/8	20	5,5	11
97940-1314	**97940-2314**	C	14	R1/4	22	6,5	14

Form D, 45°, square

Order No.	Form	Main material	A	D	L	L1	SW
97940-1406100	D	steel	10,5	M6x1	20,5	5,5	9
97940-1408100	D	steel	10,5	M8x1	20,5	5,5	9
97940-1408125	D	steel	10,5	M8x1,25	20,5	5,5	9
97940-1410100	D	steel	11	M10x1	20,5	5,5	11
97940-1418	D	steel	11	R1/8	20,5	5,5	11

Form E, 90°, square

Order No.	Form	Main material	A	D	L	L1	SW
97940-1506100	E	steel	14	M6x1	18	5,5	9
97940-1508100	E	steel	14	M8x1	18	5,5	9
97940-1508125	E	steel	14	M8x1,25	18	5,5	9
97940-1510100	E	steel	15	M10x1	18	5,5	11
97940-1518	E	steel	15	R1/8	18	5,5	11

Distribuitor direct NORELEM pentru Romania: Best TOOLS SRL
info@btools.ro | 0368.412.413 | www.btools.ro

Grease nipple caps

for conical grease nipples

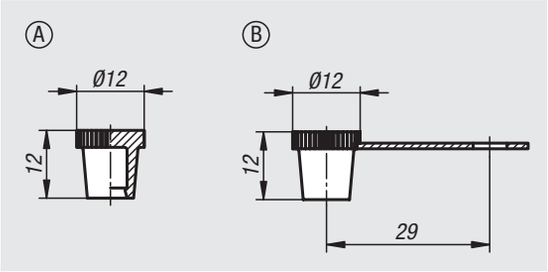

Material:
Polyethylene (PE-LLD).

Version:
red, green, yellow or black.

Sample order:
nlm 97941-911

Note:
Suitable for all DIN 71412 conical head grease nipples. They keep dirt out of the head of the nipple. The different colours are for e.g. identifying the lubrication intervals.

Application temperature: -70°C to +85°C.

Form A: without tab
Form B: with tab

Order No.	Form	Colour
97941-911	A	red
97941-912	A	green
97941-913	A	yellow
97941-914	A	black
97941-921	B	red
97941-922	B	green
97941-923	B	yellow
97941-924	B	black

Distribuitor direct NORELEM pentru Romania: Best TOOLS SRL
info@btools.ro | 0368.412.413 | www.btools.ro

Grease nipples

flush type, DIN 3405

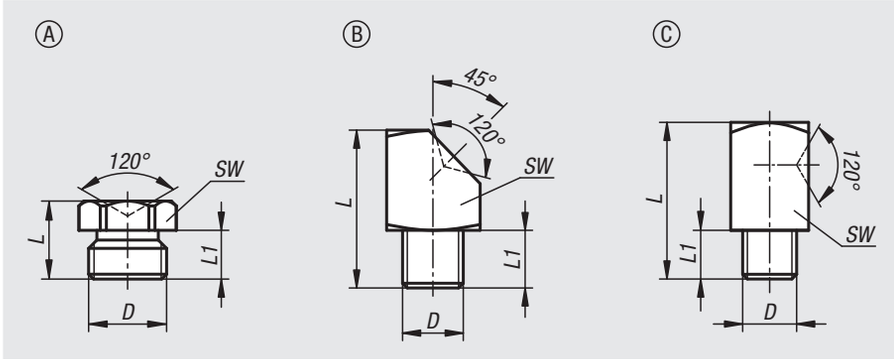

Material:
Steel or 1.4305 stainless steel

Version:
Steel electro zinc-plated.
Stainless steel bright.

Sample order:
nlm 97942-1106100

Note:
Flush type grease nipples are particularly suitable for flush or recessed installation.
By using flush type nipples, the required lubrication can also be carried out on points with poor accessibility.

Drawing reference:
Form A: straight
Form B: 45°
Form C: 90°

Order No.	Form	Main material	Version 2	D	L	L1	SW
97942-1106100	A	steel	hexagon	M6x1	9	6	7
97942-1108100	A	steel	hexagon	M8x1	9,5	6,5	9
97942-1108125	A	steel	hexagon	M8x1,25	9,5	6,5	9
97942-1110100	A	steel	hexagon	M10x1	9,5	6,5	11
97942-1118	A	steel	hexagon	R1/8	9,5	6,5	11
97942-2106100	A	stainless steel	hexagon	M6x1	9	6	7
97942-2108100	A	stainless steel	hexagon	M8x1	9,5	6,5	9
97942-2108125	A	stainless steel	hexagon	M8x1,25	9,5	6,5	9
97942-2110100	A	stainless steel	hexagon	M10x1	9,5	6,5	11
97942-2118	A	stainless steel	hexagon	G1/8	9,5	6,5	11
97942-1206100	B	steel	square	M6x1	15	5,5	9
97942-1208100	B	steel	square	M8x1	15	5,5	9
97942-1208125	B	steel	square	M8x1,25	15	5,5	9
97942-1210100	B	steel	square	M10x1	15	5,5	11
97942-1218	B	steel	square	R1/8	15	5,5	11
97942-1306100	C	steel	square	M6x1	18	5,5	9
97942-1308100	C	steel	square	M8x1	18	5,5	9
97942-1308125	C	steel	square	M8x1,25	18	5,5	9
97942-1310100	C	steel	square	M10x1	18	5,5	11
97942-1318	C	steel	square	R1/8	18	5,5	11

Distribuitor direct NORELEM pentru Romania: Best TOOLS SRL
info@btools.ro | 0368.412.413 | www.btools.ro

Grease nipples

button head DIN 3404

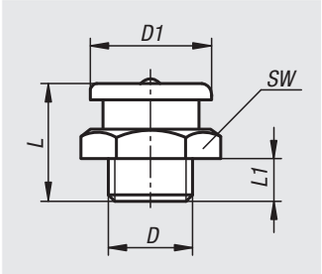

Material:
Steel or 1.4305 stainless steel

Version:
Steel electro zinc-plated.
Stainless steel bright.

Sample order:
nlm 97944-11006100

Note:
As the construction of button head grease nipples allow for a high lubrication flow rate, they are especially useful for lubrication points which require a large grease volume. Because of the robust design, button head grease nipples are preferred for machines that are subjected to high external stress.

Order No.	Main material	D	D1	L	L1	SW
97944-11006100	steel	M6x1	10	13,5	5,5	11
97944-11008100	steel	M8x1	10	13,5	5,5	11
97944-11010100	steel	M10x1	10	13,5	5,5	11
97944-11018	steel	G1/8	10	13,5	5,5	11
97944-11606100	steel	M6x1	16	17	6	17
97944-11608100	steel	M8x1	16	17	6	17
97944-11608125	steel	M8x1,25	16	17	6	17
97944-11610100	steel	M10x1	16	17	6	17
97944-11610150	steel	M10x1,5	16	17	6	17
97944-11612150	steel	M12x1,5	16	17	6	17
97944-11616150	steel	M16x1,5	16	18	7	17
97944-11618	steel	G1/8	16	17	6	17
97944-11614	steel	G1/4	16	17	6	17
97944-12216150	steel	M16x1,5	22	21,5	8	22
97944-12214	steel	G1/4	22	21,5	8	22
97944-12238	steel	G3/8	22	21,5	8	22
97944-21606100	stainless steel	M6x1	16	17	6	17
97944-21608100	stainless steel	M8x1	16	17	6	17
97944-21608125	stainless steel	M8x1,25	16	17	6	17
97944-21610100	stainless steel	M10x1	16	17	6	17
97944-21610150	stainless steel	M10x1,5	16	17	6	17
97944-21612150	stainless steel	M12x1,5	16	17	6	17
97944-21618	stainless steel	G1/8	16	17	6	17
97944-21614	stainless steel	G1/4	16	17	6	17
97944-22216150	stainless steel	M16x1,5	22	21,5	8	22
97944-22214	stainless steel	G1/4	22	21,5	8	22
97944-22238	stainless steel	G3/8	22	21,5	8	22

Distribuitor direct NORELEM pentru Romania: Best TOOLS SRL
info@btools.ro | 0368.412.413 | www.btools.ro

Grease nipple assortment box, steel

Material:
Steel.

Version:
Electro zinc-plated.

Note:
Grease nipples in an organised assortment box in different forms and thread sizes.

DIN 71412 grease nipples, conical head, Form A (straight):
25 x M6x1
25 x M8x1
15 x M10x1
15 x G1/8”

DIN 71412 grease nipples, conical head, Form B (45°):
10 x M6x1
10 x M8x1
5 x M10x1
5 x G1/8”

DIN 71412 grease nipples, conical head, Form B (90°):
10 x M6x1
10 x M8x1
5 x M10x1
5 x G1/8”

Grease nipple assortment box, steel

Order No.	Content
97950-140	140 pieces

Distribuitor direct NORELEM pentru Romania: Best TOOLS SRL
info@btools.ro | 0368.412.413 | www.btools.ro

LOCTITE liquid epoxy metals

Sample order:
nlm 97990-3471500

Safety:
Visit our website to see the safety and technical data.

Repairs using epoxy liquid metal

Description:
LOCTITE metal set liquid metals are steel or aluminium-based epoxy resins. They set new standards in repairs: great strength, very good adhesion, no shrinkage, resistant to most solvents and lubricants. After hardening they can be worked like metal by hand or machine and can be painted over.
Cracks, porous spots, faulty holes or damage to pipes, tanks, chassis and machine parts can be quickly and durably repaired using LOCTITE metal set products. They adhere well to metals, glass, ceramics and other materials.

Type S1 – 97990-3471500
Suitable as filler. Steel based, two-component epoxy adhesive that is used to repair and reproduce damaged and worn parts.

Type S2 – 97990-3472500
Suitable for casting. Steel based, two-component epoxy adhesive that is used to repair and reproduce damaged and worn parts.

Type M – 97990-3474500
Suitable for filling. Mineral based, two-component epoxy adhesive that, after hardening forms a self-lubricating surface that reduces the wear on moving parts. The product is easy and practical to use and finds application in workshops or by maintenance work directly on site.

Order No.	Container	Intern. Ident. No.	Product	Mixture ratio	Handling strength in min.	Temperature resistance
97990-3471500	pair of cans, 500 g	3471	metal-Set S1	1:1	180	-20 °C – +120 °C
97990-3472500	pair of cans, 500 g	3472	metal-Set S2	1:1	180	-20 °C – +120 °C
97990-3474500	pair of cans, 500 g	3474	metal-Set M	1:1	180	-20 °C – +120 °C

97990

LOCTITE liquid epoxy metals

Sample order:
nlm 97990-3450025

Safety:
Visit our website to see the safety and technical data.

Twin syringe – Epoxy-liquid metal 97990-3450025
Two-component epoxy adhesive that after mixing quickly hardens at room temperature. The adhesive has a high strength on metal surfaces. The gap filling ability makes this adhesive ideal for use on rough and badly fitting faces made from metal, ceramic, thermoset or wood.
The twin syringes automatically guarantee the correct mix ratio.

Repairs using epoxy liquid metal

Order No.	Container	Intern. Ident. No.	Product	Mixture ratio	Handling strength in min.	Temperature resistance
97990-3450025	25 ml	3450	twin syringe	1:1	15	-55 °C – +100 °C

Distribuitor direct NORELEM pentru Romania: Best TOOLS SRL
info@btools.ro | 0368.412.413 | www.btools.ro

LOCTITE threadlocker

Sample order:
nlm 97990-2220050

Note:
LOCTITE threadlocker mid-strength, 97990-243... has a PW recommendation from the German Federal Ministry of Health in the D2 sealant joints industry based on an inspection carried out by the DVGW Research Institute: suitable for use in the foodstuffs and potable water industries.

* Values break-away torque acc. to ISO 10964.

Safety:
Visit our website to see the safety and technical data.

Description:
For use with all screw connections. Applied as a liquid, it hardens in the absence of air and on contact with metal after being screwed into the thread.

LOCTITE threadlocker low-strength, 97990-222....
To secure set and adjustment screws up to thread size M36. Even parts with a high length to diameter ratio can be loosened again. Prevents corrosion. Good vibration resistance. Easy to remove and adjust.
Temperature-resistant from -55 °C to +150 °C.

LOCTITE threadlocker mid-strength, 97990-243....
To lock and seal threaded connections up to M36. Also hardens on lightly oiled surfaces. Resists loosening by vibration. Can be loosened again with standard tools.
Temperature-resistant from -55 °C to +180 °C.
PW recommended.

LOCTITE threadlocker high-temperature, 97990-2720050
Provides high-strength locking of threaded connections for thread sizes up to M36. Temperature resistant up to 200 °C. Easily applied due to thixotropic components.
Temperature-resistant from -55 °C to +200 °C.

LOCTITE threadlocker capillary, 97990-290....
Locks and seals by capillary action when applied subsequently, e.g. by already tightened threads or in porosities and cracks. Secures pre-mounted bolts against vibration and loss of tension. For connections up to M8.
Temperature-resistant from -55 °C to +155 °C.

LOCTITE threadlocker high-strength, 97990-2701...
To secure and seal threaded connections up to M20, which no longer have to be loosened. Resists loosening by vibration under high dynamic load. The product is also suitable for high-strength fastening connections. Can only be removed after heating to 300 °C.
Temperature resistant from -55 °C to +150 °C

Thread lock

Order No.	Container	Intern. Ident. No.	Hardening system	Viscosity m Pa · s	Handling strength in min.	Ultimate hardness in hours	Break-away torque Nm	Thread size
97990-2220010	10 ml bottle	222	anaerobic	900-1500	15	12	6	≤M36
97990-2220050	50 ml bottle	222	anaerobic	900-1500	15	12	6	≤M36
97990-2430010	10 ml bottle	243	anaerobic	1300-3000	10	12	26	≤M36
97990-2430050	50 ml bottle	243	anaerobic	1300-3000	10	12	26	≤M36
97990-2720050	50 ml bottle	272	anaerobic	4000-15000	40	12	23	≤M36
97990-2900010	10 ml bottle	290	anaerobic	20-55	20	12	10	M6
97990-2900050	50 ml bottle	290	anaerobic	20-55	20	12	10	M6
97990-2701010	10 ml bottle	2701	anaerobic	500-900	10	12	38	≤M20
97990-2701050	50 ml bottle	2701	anaerobic	500-900	10	12	38	≤M20

Distribuitor direct NORELEM pentru Romania: Best TOOLS SRL
info@btools.ro | 0368.412.413 | www.btools.ro

LOCTITE universal adhesive

Sample order:
nlm 97990-4010050

Safety:
Visit our website to see the safety and technical data.

Description:
These adhesives bond metals, rubber, plastics and other materials with and to each other. Bonds strongly in a few seconds.

LOCTITE instant adhesive universal (cyanoacrylate), 97990-401....
This adhesive bonds the most varied material mixtures (metals, plastics, leather, rubber, wood, cardboard, ceramics, etc.) and achieves great strength by small gaps.
Temperature-resistant from -40 °C to +120 °C.

LOCTITE instant adhesive universal gel (cyanoacrylate), 97990-454....
This gel adhesive can be applied exactly where required, with no running and no drips, even on vertical surfaces. Bonds different materials, even porous materials.
Good gap-filling capacity.
Temperature-resistant from -40 °C to +120 °C.

LOCTITE instant adhesive for plastic and rubbers, 97990-4060770
The combination for plastics, contact adhesive 406 (cyanoacrylate) and the primer 770 for difficult to bond plastics e.g. polyethylene (PE) and polypropylene (PP).
Temperature-resistant from -40 °C to +120 °C.

Bonding di˘erent materials

Order No.	Container	Intern. Ident. No.	Hardening system	Viscosity m Pa · s	Handling strength in sec.	Ultimate hardness in hours	Adhesion gap in mm
97990-4010020	20 g bottle	401	air humidity	100	3-10	12	0,05-0,1
97990-4010050	50 g bottle	401	air humidity	100	3-10	12	0,05-0,1
97990-4060770	20/10 g set	406/770	air humidity	20	2-10	12	0,05-0,1
97990-4540020	20 g tube	454	air humidity	gel	5-10	12	0,05-0,1

Distribuitor direct NORELEM pentru Romania: Best TOOLS SRL
info@btools.ro | 0368.412.413 | www.btools.ro

LOCTITE thread sealant

Sample order:
nlm 97990-5110250

Note:
LOCTITE plastic thread sealant, 97990-5331100 has a PW recommendation from the German Federal Ministry of Health in the D2 sealant joints industry based on an inspection carried out by the DVGW Research Institute: suitable for use in the foodstuffs and potable water industries.

Safety:
Visit our website to see the safety and technical data.

Description:
The liquid thread sealant replaces hemp, pastes and PTFE-tapes.
Parts can be immediately realigned after jointing.

LOCTITE-liquid pipe thread sealant, 97990-511....
This product is for securing and sealing metal pipe threads and attachment parts. It hardens quickly by air deprivation between close fitting metal parts.
Temperature resistant from -55 °C to +150 °C.

Approvals:
DVGW approval (EN 751-1): NG-5146CQ0312

LOCTITE liquid pipe thread sealant low strength, 97990-577....
This product is for securing and sealing metal pipe threads and attachment parts. Especially suitable for use on stainless steel parts without the need to activate the surfaces. It hardens by air deprivation between close fitting metal parts and prevents independent loosening and leaking through knocks or vibration.
Temperature resistance from -55 °C to +150 °C.

Approvals:
P1 NSF Reg. No.: 123001
DVGW approval (EN 751-1): NG-5146AR0621
WRAS approval (BS 6920): 0711506

LOCTITE plastic thread seal, 97990-5331100
This product is recommended for sealing plastic thread connections on cold and warm water system plastic pipes, and plastic/metal combinations. It hardens through air humidity by ambient temperatures to a low strength, permanently elastic seal against cold and warm water.
Temperature resistant from -55 °C to +150 °C.

Approvals:
WRAS approval (BS 6920) for potable water: 0706521
DVGW approval (EN 751-1): NG-5146AR0618 P1
NSF Reg. No: 123620

sealing pipe threads

Order No.	Container	Intern. Ident. No.	Hardening system	Viscosity m Pa · s	Handling strength	Ultimate hardness in hours	Break-away torque Nm	Thread size
97990-5110050	50 ml bottle	511	anaerobic	9000-22000	25 min.	12	6	≤R3
97990-5110250	250 ml tube	511	anaerobic	9000-22000	25 min.	12	6	≤R3
97990-5770050	50 ml bottle	577	anaerobic	16000-33000	30 min.	24	11	≤R3
97990-5770250	250 ml tube	577	anaerobic	16000-33000	30 min.	24	11	≤R3
97990-5331100	100 ml tube	5331	air humidity	50000	immediately	12	1,5	≤R3

Distribuitor direct NORELEM pentru Romania: Best TOOLS SRL
info@btools.ro | 0368.412.413 | www.btools.ro

LOCTITE flange sealant

Sample order:
nlm 97990-5730250

Note:
* Skin formation time.

Safety:
Visit our website to see the safety and technical data.

Description:
The adaptability of liquid or paste flange sealants solves almost every sealant problem.

LOCTITE flange sealant low strength, 97990-573…
Resistant to the majority of lubricating and hydraulic oils, petrol, diesel and water. To seal close fitting joints between rigid metallic sealing and flange faces. The product hardens under air deprivation between close fitting metal surfaces. Typical applications are the production of liquid seals on torsionally stiff flange connections e.g. transmission and motor housings etc.
Temperature resistant from -55 °C to +150 °C.

LOCTITE flange sealant removable, 97990-5203300
To seal close fitting joints between rigid metallic sealing and flange faces. The product quickly hardens under air deprivation between close fitting metal surfaces. A seal against low pressures is produced shortly after the flange is mounted. Can be removed easily, is simply pulled off as a thin film. Typical applications are the production of liquid seals on torsionally stiff flange connections e.g. transmission and motor housings etc.
Temperature resistant from -55 °C to +150 °C.

LOCTITE flange sealant permanently elastic, 97900-5910300
Low strength flange sealant for flexible flanges. For plastic/plastic and plastic/metal combinations. Good resistance to oil and against relative movements. Typical applications are amongst others sealing flange like covers on such as control casings and oil tanks.
Temperature resistant from -55 °C to +200 °C.

Sealing faces

Order No.	Container	Intern. Ident. No.	Hardening system	Viscosity m Pa · s	Handling strength	Tensile shear strength N/mm²	Adhesion gap in mm
97990-5730050	50 ml bottle	573	anaerobic	13500-33000	9 hours	1,3	≤0,1
97990-5730250	250 ml tube	573	anaerobic	13500-33000	9 hours	1,3	≤0,1
97990-5731000	1000 ml can	573	anaerobic	13500-33000	9 hours	1,3	≤0,1
97990-5203300	300 ml cartridge	5203	anaerobic	50000-100000	10 min.*	1	≤0,125
97990-5910300	300 ml cartridge	5910	air humidity	paste	40 min.	1,2	>0,3

Distribuitor direct NORELEM pentru Romania: Best TOOLS SRL
info@btools.ro | 0368.412.413 | www.btools.ro

LOCTITE adhesive and sealant

Sample order:
nlm 97990-5366310

Note:
* Skin formation time.

Safety:
Visit our website to see the safety and technical data.

Description:
For permanently elastic adhesive joints and a simultaneous sealant effect against water and dust, etc.

LOCTITE permanently elastic adhesive and sealant, 97990-5366310
Clear paste. Is used as an adhesive to optimally seal, glue and protect. Typical applications are the sealing of wall panels on trains, sealing heat sources (ovens, heat exchangers, steam pipes, hot water boilers), protection and insulation of switchboxes and gluing HCR silicon. Also used in the maintenance sector.
Temperature resistant from -50 °C to +200 °C.

LOCTITE permanently elastic black adhesive and sealant, 97990-5368310
Black paste. Used mainly to seal. Is also suitable for gluing and high temperature applications. Used in many industrial sectors, such as electrical household equipment and the automobile and airspace industries.
Temperature resistant from -50 °C to +200 °C.

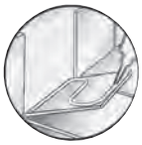

Elastic bonding and sealing

Order No.	Container	Intern. Ident. No.	Hardening system	Handling strength in min.	Tensile strength N/mm²	Elongation %	Shore grade
97990-5366310	310 ml cartridge	5366	air humidity	5*	2	530	25A
97990-5368310	310 ml cartridge	5368	air humidity	5*	2	435	26A

Distribuitor direct NORELEM pentru Romania: Best TOOLS SRL
info@btools.ro | 0368.412.413 | www.btools.ro

LOCTITE retaining compound

Sample order:
nlm 97990-6030010

Safety:
Visit our website to see the safety and technical data.

Description:
For bonding bushes, bearings and sleeves with push, interference and shrink fits.
Full surface contact prevents play, corrosion and contact rust.

LOCTITE retaining compound, oil-tolerant, 97990-603....
This product is used for gluing cylindrical fastener parts. It tolerates small amounts of oily dirt. Hardens under air deprivation between close fitting metal surfaces and prevents independent loosening and leaks caused by knocks and vibrations. Typical applications are amongst others securing roller bearings or oil impregnated bushes in bearing houses.
Temperature resistant from -55 °C to +150 °C.

LOCTITE retaining compound special, 97990-638....
The product is used for gluing cylindrical fastener parts, especially where a gap of up to 0.25 mm is present and maximum strength at room temperature is required. Hardens under air deprivation between close fitting metal surfaces and prevents independent loosening and leaks caused by knocks and vibrations.
Temperature resistant from -55 °C to +180 °C.

LOCTITE retaining compound universal, 97990-648....
This product is used for gluing cylindrical fastener parts. Hardens under air deprivation between close fitting metal surfaces and prevents independent loosening and leaks caused by knocks and vibrations. Typical applications are amonst others gluing gear wheels and chain sprockets to drive shafts.
Temperature resistant from -55 °C to +180 °C.

Bonds bushes and bearings

Order No.	Container	Intern. Ident. No.	Hardening system	Viscosity m Pa · s	Handling strength in min.	Adhesion gap in mm
97990-6030010	10 ml bottle	603	anaerobic	100-150	8	0,1
97990-6030050	50 ml bottle	603	anaerobic	100-150	8	0,1
97990-6380010	10 ml bottle	638	anaerobic	2000-3000	4	0,25
97990-6380050	50 ml bottle	638	anaerobic	2000-3000	4	0,25
97990-6480010	10 ml bottle	648	anaerobic	400-600	3	0,15
97990-6480050	50 ml bottle	648	anaerobic	400-600	3	0,15

Distribuitor direct NORELEM pentru Romania: Best TOOLS SRL
info@btools.ro | 0368.412.413 | www.btools.ro

LOCTITE cleaner

Sample order:
nlm 97990-7063400

Safety:
Visit our website to see the safety and technical data.

Description:
Cleaning increases the quality of sealed and bonded joints.

LOCTITE super clean, 97990-7063…
CFC free solvent based cleaner, used to clean and degrease surfaces. Ideal for preparing surfaces before applying adhesives or sealants. Quick, residue-free drying.

LOCTITE super clean, 97990-7070400
CFC free solvent based cleaner, used especially for cleaning, degreasing and preparing plastic parts before applying adhesives. Can be used as a spray or immersion bath by room temperature or by higher temperatures. Removes most greases, oils, lubricating liquids, metal swarf and fine particles from plastic parts without the danger of stress cracking. Compatible with metals and most plastics and elastomers.

LOCTITE adhesive and sealant remover, 97990-7080300
This product is used to help remove hardened chemical flange sealants in that it softens the sealant on the flange and so prevents damage caused by forcible scraping. After application a foaming film is formed that prevents the product running off the surface being treated. This allows it to work on the flange sealant for the required time. Typical application is the removal of all liquid flange sealants from metal flanges.

Surface preparation

Order No.	Container	Intern. Ident. No.
97990-7063150	150 ml aerosol	7063
97990-7063400	400 ml vaporizer	7063
97990-7070400	400 ml vaporizer	7070
97990-7080300	400 ml aerosol	7200

Distribuitor direct NORELEM pentru Romania: Best TOOLS SRL
info@btools.ro | 0368.412.413 | www.btools.ro

LOCTITE activators

Description:
To harden cyanoacrylate (CA) adhesives and anaerobically hardened adhesives; activators are used in passive materials for rapid and complete hardening. To that end the liquid activator is applied to one or both surfaces of the joint before the adhesive is applied.

Sample order:
nlm 97990-7386000

Note:
The activators are supplied in 500 ml sets.

Safety:
Visit our website to see the safety and technical data.

Order No.	Activator type	Intern. Ident. No.	Open time	Carrier medium	Application
97990-7386000	activator for 3298	7386	1 hour	heptane	only for single side activation
97990-7471000	activator T for anaerobic products	7471	30 days	acetone/isopropanol	cure accelerator, may be applicated on both sides
97990-7649000	activator N for anaerobic products	7649	30 days	acetone	can be applied to both sides of the fastening

Application equipment

Description:
Suitable equipment simplifies the work and promotes correct practice in handling LOCTITE products.

LOCTITE Peristaltic Hand Pump, 97990-9700100
This hand pump is an inexpensive, accurate hand dosing pump, which screws onto the 50 ml or the 250 ml pack.
LOCTITE screw locks and LOCTITE jointing products can be dosed from 0.01 to 0.4 ml with viscosities up to 30000 m Pa · s using this manual system. The system can be used in any position, does not drip and optimises product consumption. In addition, it requires no cleaning and no electric or compressed air connection.

Teroson cartridge press 97990-9150310
For standard 150/310 ml cartridges.
Rugged design for regular use.

Sample order:
nlm 97990-9700100

Order No.	Item name
97990-9700100	Peristaltic Hand Pump
97990-9150310	Teroson Cartridge Applicator

Distribuitor direct NORELEM pentru Romania: Best TOOLS SRL
info@btools.ro | 0368.412.413 | www.btools.ro

Push-type grease guns

Material:
Housing: plastic.
Pressure pipe and mouthpiece: steel.

Version:
Housing: black.
Pressure pipe and mouthpiece: electro zinc-plated.

Sample order:
nlm 97990-10-2150

Note:
Push-type grease gun made from impact-resistant plastic. The mouthpiece is screwed onto the pressure pipe and so, can be replaced.

Order No.	Version 1	Content	Medium	Pressure bar	Mouth piece	Connecting thread
97990-10-1150	for flush-type grease nipples	150 ml	8 ea. No. 01, 8 ea. No. 02, 4 ea. No. 03	20 bar	Pointed mouthpiece	M10x1
97990-10-2150	for conical and ball head grease nipples	150 ml	Grease up to NLGI 3 at 20 °C	20 bar	Hollow mouthpiece	M10x1

Distribuitor direct NORELEM pentru Romania: Best TOOLS SRL
info@btools.ro | 0368.412.413 | www.btools.ro

DIN 1283 grease guns

Material:
Housing: steel.
Grease gun head: die-cast zinc.

Sample order:
nlm 97990-11-121500

Note:
DIN 1283 hand-lever grease gun
for 400 g grease cartridges or 500 cm^3 bulk grease. The pump piston is a precision fit in the cylinder. This prevents grease from seeping out. Quick venting by half a turn of the grease gun hose.

Supplied with reinforced hose and mouthpiece.

Order No.	Version 1	Version 2	Filling options
97990-11-111500	standard	for DIN 71412 conical head grease nipples	Grease cartridge, bulk grease
97990-11-121500	Premium	for DIN 71413 conical head grease nipples	Grease cartridge, bulk grease, filling device

Order No.	Medium	Pressure bar	Burst pressure bar	Volume per stroke cm^3
97990-11-111500	Grease up to NLGI 2 at 20 °C	400 bar	850 bar	1,2
97990-11-121500	Grease up to NLGI 3 at 20 °C	600 bar	900 bar	1,2

Order No.	Connecting thread	Connection	Mouth piece
97990-11-111500	M10x1	Reinforced hose Ø8x300	Hydraulic mouthpiece
97990-11-121500	M10x1	Reinforced hose Ø11x300	Precision mouthpiece

Distribuitor direct NORELEM pentru Romania: Best TOOLS SRL
info@btools.ro | 0368.412.413 | www.btools.ro

Grease guns, one-hand operation, similar to DIN 1283

Material:
Housing: steel.
Grease gun head: die-cast zinc.

Sample order:
nlm 97990-12-112500

Note:
DIN 1283 based one-hand grease gun
for 400 g grease cartridges or 500 cm^3 bulk grease. The pump piston is a precision fit in the cylinder. This prevents grease from seeping out. Quick venting by half a turn of the grease gun hose.

Changeover from high volume grease delivery to high pressure with a simple adjustment on the grip.

Supplied with straight nozzle tube and mouthpiece.

Order No.	Full volume cm^3	Filling options	Medium	Pressure bar
97990-12-112500	500	grease cartridge, bulk grease, filling device	Grease up to NLGI 2 at 20 °C	300 bar

Order No.	Burst pressure bar	Volume per stroke cm^3	Connecting thread	Connection	Mouth piece
97990-12-112500	850 bar	1,1	M10x1	nozzle tube Ø10x150	hydraulic mouthpiece

Distribuitor direct NORELEM pentru Romania: Best TOOLS SRL
info@btools.ro | 0368.412.413 | www.btools.ro

Grease guns, two-hand operation

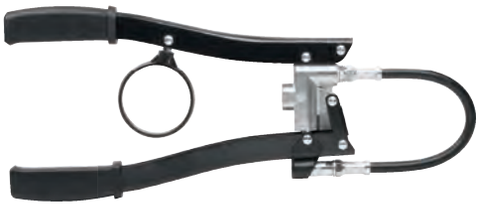

Material:
Housing: steel.
Grease gun head: die-cast zinc.

Sample order:
nlm 97990-13-11500

Note:
Two-hand grease gun for 500 g screw-in cartridges. The pump piston is a precision fit in the cylinder. This prevents grease from seeping out. Complete emptying of the cartridge using the vacuum principle. Quick and clean cartridge replacement. Fill level and type of grease are always visible thanks to the open design.

Supplied with reinforced hose and mouthpiece.

Order No.	Full volume cm^3	Filling options	Medium	Pressure bar
97990-13-11500	500	500 g screw-in cartridge	Grease up to NLGI 2 at 20 °C	400 bar

Order No.	Burst pressure bar	Volume per stroke cm^3	Connecting thread	Connection	Mouth piece
97990-13-11500	850 bar	2	M10x1	reinforced hose Ø11x300	precision mouthpiece

Distribuitor direct NORELEM pentru Romania: Best TOOLS SRL
info@btools.ro | 0368.412.413 | www.btools.ro

Grease gun mouthpieces, steel

Material:
Steel.

Version:
Electro zinc-plated.

Sample order:
nlm 97990-15-210

Note:
Mouthpieces for grease guns.

Order No.	Version 1	Version 2	Connecting thread	D	L	SW	Suitable for
97990-15-110	Hydraulic mouthpiece	4 jaws, stamped	M10x1	15	37	13	grease nipples conical head DIN 71413
97990-15-210	Precision mouthpiece	4 jaws, turned	M10x1	15	37	13	grease nipples conical head DIN 71413
97990-15-310	Precision mouthpiece	G-coupling	M10x1	15	37	13	for all DIN grease nipples

Distribuitor direct NORELEM pentru Romania: Best TOOLS SRL
info@btools.ro | 0368.412.413 | www.btools.ro

Reinforced hoses for DIN 1283 grease guns

Material:
Connector thread: steel
Outer sleeve: Ø8 polyamide 12, soft. Ø11 polyurethane, stabilised against microbes.
Inner hose: polyamide 6, soft.
Reinforcement: high-strength polyester.

Sample order:
nlm 97990-16-1011

Note:
High-strength reinforced hoses for grease guns.

Order No.	Main material	Connecting thread	D	L	SW	Burst pressure bar
97990-16-1008	polyamide	M10x1	8	300	-	900 bar
97990-16-1011	polyurethane	M10x1	11	300	15	900 bar

Distribuitor direct NORELEM pentru Romania: Best TOOLS SRL
info@btools.ro | 0368.412.413 | www.btools.ro

Pump spray bottles

Material:
Container: high-density polyethylene (HDPE).
Pump head: special acid and lye resistant plastic. By universal version polyamide.
Nozzle: acid and lye resistant polypropylene. By universal version polyamide.
Valve stem: acid and lye resistant stainless steel. By universal version brass.
Spring: stainless steel.
Seals: Viton® (FKM).

Version:
Container: white, transparent.

Sample order:
nlm 97990-30-121500

Note:
Pump spray bottle for professional work.

Pressure is built up in the container by pumping. Light thumb pressure on the spray button is sufficient for a constant spray jet. Maximum operating pressure: 2.5 bar. With combined overpressure and bleed valve.

Container made of transparent HDPE with ml scale. High stand stability and large inlet for easy filling and cleaning. UV-resistant.

Universal version: suitable for solvents (except acetone) and thin mineral oils. With regulating nozzle (selective jet and cone jet) or flat-jet nozzle.

Version for diluted acids: suitable for pH value 1 to 7.

Version for diluted lyes: suitable for pH value 7 to 14.

Temperature range:
+5 °C to +30 °C

Order No.	Version 1	Container volume max. ml	Filling quantity max. ml	Nozzle	Colour Cap
97990-30-111500	universal	1500	1200	Regulating nozzle	jet black
97990-30-121500	universal	1500	1200	Flat-jet nozzle	grey
97990-30-221500	for diluted acids	1500	1200	Flat-jet nozzle	red
97990-30-321500	for diluted lyes	1500	1200	Flat-jet nozzle	blue

Notes

Distribuitor direct NORELEM pentru Romania: Best TOOLS SRL
info@btools.ro | 0368.412.413 | www.btools.ro

Technical data

Index and list of DIN Standards

Notes

Technical data for grey cast iron (cast iron with flake graphite)

If cast iron is used for the base of drilling, milling, turning fixtures etc, it can give these crucial advantages over traditional steel fixtures:

– Cast iron has very good vibration damping properties (ratio of cast iron's damping effect to that of steel = 1 : 4.3. See also the comparative diagram).
– Cast iron has good fail-safe properties and good resistance to corrosion.
– Cast iron is easy to machine.

Comparison diagram of oscillation amplitude

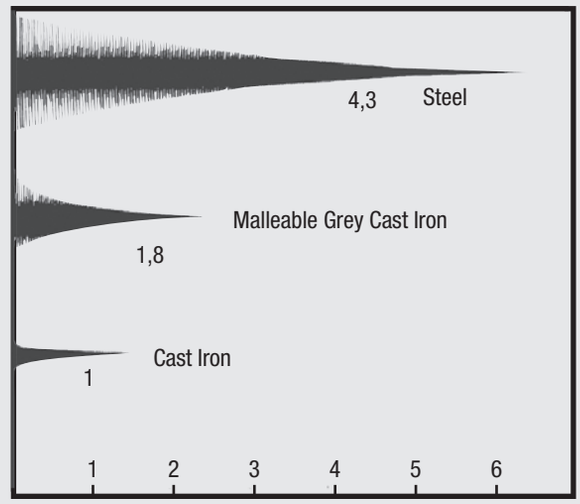

Micrograph of cast iron with flake graphite

Material			GJL 250	GJL 300
Tensile strength	R_m	N/mm²	250 – 350	300 – 400
0.1 technical elastic limit	$R_{p\,0,1}$	N/mm²	–	195 – 260
Elasticity limit 0,1	R_e	N/mm²	165 – 228	195 – 260
Compressive strength	δ_{dB}	N/mm²	840	960
Shearing strength	τ_{aB}	N/mm²	290	345
Modulus of elasticity	E	(kN/mm²)	103 – 118	108 – 137
Density	e	g/cm³	7,2	7,25
Hardness	–	HB 30	180 – 250	200 – 275
Coefficient of linear expansion	α	$1 \cdot 10^{-6}$/K	10	11,7

Length tolerances for special lengths:
Grey iron and aluminium profiles and steel and plastic offcuts (Group 01000) are mostly cut to length with saw cuts and they may therefore have the following length tolerances because of their variations relative to the standard design:

Linear Dimensions	Deviations in mm
100-290	+ 10 + 3
300-590	+ 15 + 8
over 600	+ 50 + 20

All other nominal sizes are according to "DIN ISO 2768-mk".

ISO fits for standard bores

DK 621.753.2(100) GERMAN STANDARDS August 1966

Tolerance examples for nominal diameter 60 mm

ID (bores) — OD (shafts) — Do not apply to nominal diameter 60 mm — Tolerance ranges acc. to DIN 7157 [1] — Series 1 — Series 2

ISO fits for standard bores

Tolerance ranges dimensions in µm

DIN 7154 sheet 1

ISO-Fits for the hole basis System.
Tolerance zones, deviations
Ajustements ISO pour le système de l'alésage normal.
Zones de tolérance, écarts

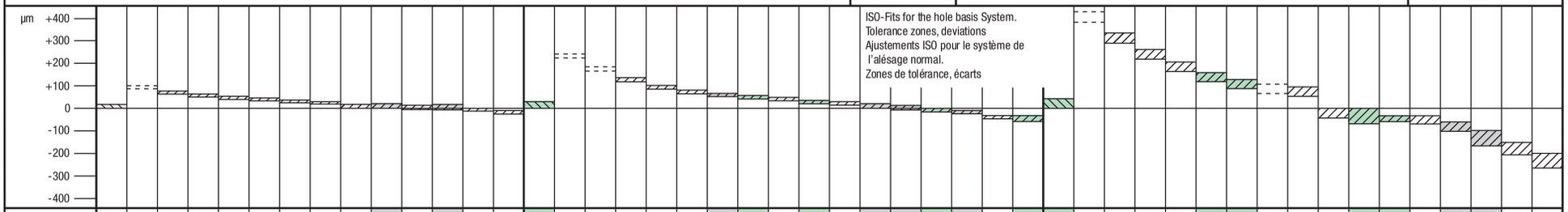

Nominal dimension range in mm		Tolerance range	H6	u5	t5	s5	r5	p5	n5	m5	k5	k6	j5	j6	h5	g5	H7	za6	z6	x6	u6	t6	s6	r6	p6	n6	m6	k6	j6	h6	g6	f6	f7	H8	zc8	zb8	za8	z8	x8	u8	t8	s8	h8	h9	f7	f8	e8	d9	c9	b9
	Š 1		+6	+22	—	+18	+14	+10	+8	+6	+4	+6	+2	+4	0	-2	+10	+38	+32	+26	+24	—	+20	+16	+12	+10	+8	+6	+4	0	-2	-6	-6	+14	+74	+54	—	+40	+34	—	—	+28	0	0	-6	-6	-14	-20	-60	-140
	Ÿ 3		0	+18		+14	+10	+6	+4	+2	0	0	-2	-2	-4	-6	0	+32	+26	+20	+18		+14	+10	+6	+4	+2	0	-2	-6	-8	-12	-16	0	+60	+40		+26	+20			+14	-14	-25	-16	-20	-28	-45	-85	-165
>	3		+8	+28	—	+24	+20	+17	+13	+9	+6	+9	+3	+6	0	-4	+12	+50	+43	+36	+31	—	+27	+23	+20	+16	+12	+9	+6	0	-4	-10	-10	+18	+98	+68	—	+53	+46	—	—	+37	0	0	-10	-10	-20	-30	-70	-140
Ÿ	6		0	+23		+19	+15	+12	+8	+4	+1	+1	-2	-2	-5	-9	0	+42	+35	+28	+23		+19	+15	+12	+8	+4	+1	-2	-8	-12	-18	-22	0	+80	+50		+35	+28			+19	-18	-30	-22	-28	-38	-60	-100	-170
>	6		+9	+34	—	+29	+25	+21	+16	+12	+7	+10	+4	+7	0	-5	+15	+61	+51	+43	+37	—	+32	+28	+24	+19	+15	+10	+7	0	-5	-13	-13	+22	+119	+89	+74	+64	+56	—	—	+45	0	0	-13	-13	-25	-40	-80	-150
Ÿ	10		0	+28		+23	+19	+15	+10	+6	+1	+1	-2	-2	-6	-11	0	+52	+42	+34	+28		+23	+19	+15	+10	+6	+1	-2	-9	-14	-22	-28	0	+97	+67	+52	+42	+34			+23	-22	-36	-28	-35	-47	-76	-116	-186
>	10																	+75	+61	+51															+157	+117	+91	+77	+67											
Ÿ	14		+11	+41	—	+36	+31	+26	+20	+15	+9	+12	+5	+8	0	-6	+18	+64	+50	+40	+44	—	+39	+34	+29	+23	+18	+12	+8	0	-6	-16	-16	+27	+130	+90	+64	+50	+40	—	—	+55	0	0	-16	-16	-32	-50	-95	-150
>	14		0	+33		+28	+23	+18	+12	+7	+1	+1	-3	-3	-8	-14	0	+88	+71	+56	+33		+28	+23	+18	+12	+7	+1	-3	-11	-17	-27	-34	0	+177	+135	+104	+87	+72			+28	-27	-43	-34	-43	-59	-93	-138	-193
Ÿ	18																	+77	+60	+45															+150	+108	+77	+60	+45											
>	18			+50	—													+86	+67	+54															+221	+169	+131	+106	+87											
Ÿ	24		+13	+41		+44	+37	+31	+24	+17	+11	+15	+5	+9	0	-7	+21	—	+73	+54	+41	—	+48	+41	+35	+28	+21	+15	+9	0	-7	-20	-20	+33	+188	+136	+98	+73	+54	—	—	+68	0	0	-20	-20	-40	-65	-110	-160
>	24		0	—	+50														+101	+77	+61	+54													+251	+193	+151	+121	+97	+81										
Ÿ	30				+41	+35	+28	+22	+15	+8	+2	+2	-4	-4	-9	-16	0		+88	+64	+48	+41	+35	+28	+22	+15	+8	+2	-4	-13	-20	-33	-41	0	+218	+160	+118	+88	+64	+48			+35	-33	-52	-41	-53	-73	-117	-162	-212
>	30				+59														+128	+96	+76	+64														+239	+187	+151	+119	+99									-120	-170
Ÿ	40		+16	—	+48	+54	+45	+37	+28	+20	+13	+18	+6	+11	0	-9	+25	—	+112	+80	+60	+48	+59	+50	+42	+33	+25	+18	+11	0	-9	-25	-25	+39	—	+200	+148	+112	+80	+48	—	+82	0	0	-25	-25	-50	-80	-182	-232
>	40		0		+65	+43	+34	+26	+17	+9	+2	+2	-5	-5	-11	-20	0		—	+113	+86	+70	+43	+34	+26	+17	+9	+2	-5	-16	-25	-41	-50	0		+281	+219	+175	+136	+109		+43	-39	-62	-50	-64	-89	-142	-130	-180
Ÿ	50				+54															+97	+70	+54														+242	+180	+136	+97	+70									-192	-242
>	50				+79	+66	+54													+141	+106	+85	+72	+60												+346	+272	+218	+168	+133			+99							-140	-190
Ÿ	65		+19	—	+66	+53	+41	+45	+33	+24	+15	+21	+6	+12	0	-10	+30	—	—	+122	+87	+66	+53	+41	+51	+39	+30	+21	+12	0	-10	-30	-30	+46	—	+300	+226	+172	+122	+87	—	+53	0	0	-30	-30	-60	-100	-214	-264
>	65		0		—	+72	+56	+32	+20	+11	+2	+2	-7	-7	-13	-23	0			—	+121	+94	+78	+62												—	+320	+256	+192	+148			+105	-46	-74	-60	-76	-106	-174	-150	-200
Ÿ	80					+59	+43														+102	+75	+59	+43													+274	+210	+146	+102			+59							-224	-274
>	80				+86	+66															+146	+113	+93	+73												+389	+312	+232	+178			+125							-170	-220
Ÿ	100		+22	—	—	+71	+51	+52	+38	+28	+18	+25	+6	+13	0	-12	+35	—	—	—	+124	+91	+71	+51	+59	+45	+35	+25	+13	0	-12	-36	-36	+54	—	—	+335	+258	+178	+124	—	+71	0	0	-36	-36	-72	-120	-257	-307
>	100		0			—	+69	+37	+23	+13	+3	+3	-9	-9	-15	-27	0				+166	+126	+101	+76	+37	+23	+13	+3	-9	-22	-34	-58	-71	0			—	+364	+264	+198	+158	+133	-54	-87	-71	-90	-126	-207	-180	-240
Ÿ	120						+54														+144	+104	+79	+54														+310	+210	+144	+104	+79								-267	-327

Black numbers = GO limit
Green numbers = NO-GO limit
Fits for standard bores, fit tolerances (clearances and interferences) see DIN 7154, sheet 2
Fits for standard shaft, see DIN 7155, sheet 1 and sheet 2

[1]) DIN 7157 tolerance ranges are recommended.
Series 1 is preferable to Series 2

Continued on page 2

Amended August 1966: dimensions coordinated to ISO recommendations ISO/R 286-1962

Previous editions: DIN 7154: 10.36
DIN 7154 sheet 1: 12.50, 9.56

"Reproduced with permission of DIN Deutsches Institut für Normungen e.V.
The most recent edition of the standard available from Beuth Verlag GmbH, Burggrafenstrafle 4-10, 1000 Berlin 30 is the authoritative version"

Beuth-Vertrieb GmbH, Berlin 30 and Cologne 8.66 have monopoly rights for sale of standard sheets

Distributor direct NORELEM pentru Romania: Best TOOLS SRL
info@btools.ro | 0368.412.413 | www.btools.ro

DIN 7154 page2-sheet 1

Tolerance examples for nominal diameter 60 mm

ID (bores) — OD (shafts) — Do not apply to nominal diameter 60 mm — Tolerance ranges acc. to DIN 7157 [1]) — Series 1 — Series 2

Dimensions in µm

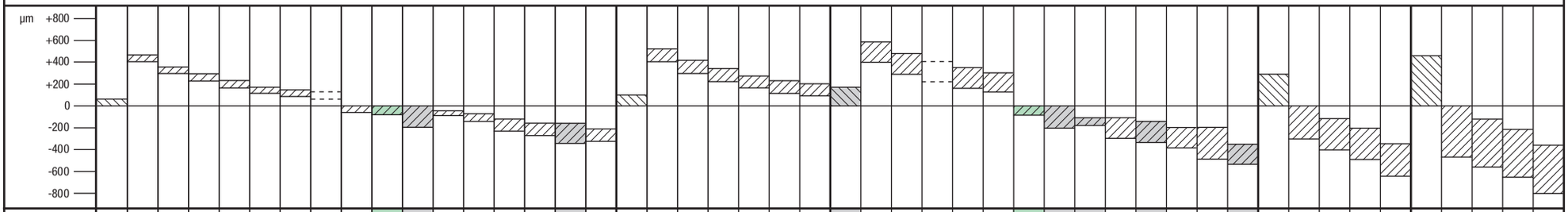

Nominal dimension range in mm	H9	zc9	zb9	za9	z9	x9	u9	t9	h8	h9	h11	f8	e9	d10	c10	c11	b10
‹ 1	+25	+85	+65	—	+51	+45	—	—	0	0	0	-6	-14	-20	-60	-60	-140
› 3	0	+60	+40		+26	+20			-14	-25	-60	-20	-39	-60	-100	-120	-180
> 3	+30	+110	+80	—	+65	+58	—	—	0	0	0	-10	-20	-30	-70	-70	-140
› 6	0	+80	+50		+35	+28			-18	-30	-75	-28	-50	-78	-118	-145	-188
> 6	+36	+133	+103	—	+78	+70	—	—	0	0	0	-13	-25	-40	-80	-80	-150
› 10	0	+97	+67		+42	+34			-22	-36	-90	-35	-61	-98	-138	-170	-208
> 10		+173	+133	—	+93	+83											
› 14	+43	+130	+90		+50	+40	—	—	0	0	0	-16	-32	-50	-95	-95	-150
> 14	0	+193	+151	—	+103	+88			-27	-43	-110	-43	-75	-112	-165	-205	-220
› 18		+150	+108		+60	+45											
> 18		+240	+188	+150	+125	+106	—										
› 24	+52	+188	+136	+98	+73	+54		—	0	0	0	-20	-40	-65	-110	-110	-160
> 24	0	+270	+212	+170	+140	+116	+100		-33	-52	-130	-53	-92	-149	-194	-240	-244
› 30		+218	+160	+118	+88	+64	+48										
> 30		+336	+262	+210	+174	+142	+122								-120	-120	-170
› 40	+62	+274	+200	+148	+112	+80	+60	—	0	0	0	-25	-50	-80	-220	-280	-270
> 40	0	+387	+304	+242	+198	+159	+132		-39	-62	-160	-64	-112	-180	-130	-130	-180
› 50		+325	+242	+180	+136	+97	+70								-230	-290	-280
> 50		+479	+374	+300	+245	+196	+161								-140	-140	-190
› 65	+74	+405	+300	+226	+172	+122	+87	—	0	0	0	-30	-60	-100	-260	-330	-310
> 65	0	—	+434	+348	+284	+220	+176		-46	-74	-190	-76	-134	-220	-150	-150	-200
› 80			+360	+274	+210	+146	+102								-270	-340	-320
> 80			+532	+422	+345	+265	+211								-170	-170	-220
› 100	+87	—	+445	+335	+258	+178	+124	—	0	0	0	-36	-72	-120	-310	-390	-360
> 100	0	—	—	+487	+397	+297	+231		-54	-87	-220	-90	-159	-260	-180	-180	-240
› 120				+400	+310	+210	+144								-320	-400	-380

Nominal dimension range in mm	H10	zc10	zb10	za10	z10	x10	u10	H11	zc11	zb11	za11	z11	x11	h9	h11	d9	d11	c11	b11	b12	a11
‹ 1	+40	+100	—	—	+66	—	—	+60	+120	—	—	—	—	0	0	-20	-20	-60	-140	-140	-270
› 3	0	+60			+26			0	+60					-25	-60	-45	-80	-120	-200	-240	-330
> 3	+48	+128	—	—	+83	—	—	+75	+155	—	—	—	—	0	0	-30	-30	-70	-140	-140	-270
› 6	0	+80			+35			0	+80					-30	-75	-60	-105	-145	-215	-260	-345
> 6	+58	+155	+125	—	+100	—	—	+90	+187	+157	—	—	—	0	0	-40	-40	-80	-150	-150	-280
› 10	0	+97	+67		+42			0	+97	+67				-36	-90	-76	-130	-170	-240	-300	-370
> 10		+200	+160	—	+120	—			+240	+200											
› 14	+70	+130	+90		+42		—	+110	+130	+90	—	—	—	0	0	-50	-50	-95	-150	-150	-290
> 14	0	+220	+178	—	+130	+115		0	+260	+218				-43	-110	-93	-160	-205	-260	-330	-400
› 18		+150	+108		+60	+45			+150	+108											
> 18		+272	+220	—	+157	+138			+318	+266	—	—									
› 24	+84	+188	+136		+73	+54	—	+130	+188	+136			—	0	0	-65	-65	-110	-160	-160	-300
> 24	0	+302	+244	—	+172	+148		0	+348	+290	—	+218		-52	-130	-117	-195	-240	-290	-370	-430
› 30		+218	+160		+88	+64			+218	+160		+88									
> 30		+374	+300	—	+212	+180	—		+434	+360	—	+272						-120	-170	-170	-310
› 40	+100	+274	+200		+112	+80		+160	+274	+200		+112	—	0	0	-80	-80	-280	-330	-420	-470
> 40	0	+425	+342	+280	+236	+197	+170	0	+485	+402	—	+296		-62	-160	-142	-240	-130	-180	-180	-320
› 50		+325	+242	+180	+136	+97	+70		+325	+242		+136						-290	-340	-430	-480
> 50		+525	+420	+346	+292	+242	+207		+595	+490	—	+362	+312					-140	-190	-190	-340
› 65	+120	+405	+300	+226	+172	+122	+87	+190	+405	+300		+172	+122	0	0	-100	-100	-330	-380	-490	-530
> 65	0	+600	+480	+394	+330	+266	+222	0	+670	+550	—	+400	+336	-74	-190	-174	-290	-150	-200	-200	-360
› 80		+480	+360	+274	+210	+146	+102		+480	+360		+210	+146					-340	-390	-500	-550
> 80		+725	+585	+475	+398	+318	+264		+805	+665	—	+478	+398					-170	-220	-220	-380
› 100	+140	+585	+445	+335	+258	+178	+124	+220	+585	+445		+258	+178	0	0	-120	-120	-390	-440	-570	-600
> 100	0	+830	+665	+540	+450	+350	+284	0	+910	+745	+620	+530	+430	-87	-220	-207	-340	-180	-240	-240	-410
› 120		+690	+525	+400	+310	+210	+144		+690	+525	+400	+310	+210					-400	-460	-590	-630

Nominal dimension range in mm	H12	h12	d12	b12	a12	H13	h13	d13	b13	a13
‹ 1	+100	0	-20	-140	-270	+140	0	-20	-140	-270
› 3	0	-100	-120	-240	-370	0	-140	-160	-280	-410
> 3	+120	0	-30	-140	-270	+180	0	-30	-140	-270
› 6	0	-120	-150	-260	-390	0	-180	-210	-320	-450
> 6	+150	0	-40	-150	-280	+220	0	-40	-150	-280
› 10	0	-150	-190	-300	-430	0	-220	-260	-370	-500
> 10	+180	0	-50	-150	-290	+270	0	-50	-150	-290
› 14	0	-180	-230	-330	-470	0	-270	-320	-420	-560
> 14	+210	0	-65	-160	-300	+330	0	-65	-160	-300
› 24	0	-210	-275	-370	-510	0	-330	-395	-490	-630
> 24	+250	0	-80	-170	-310	+390	0	-80	-170	-310
› 30	0	-250	-330	-420	-560	0	-390	-470	-560	-700
> 30	+300	0	-100	-190	-340	+460	0	-100	-190	-340
› 40	0	-300	-400	-490	-640	0	-460	-560	-650	-800
> 40	+350	0	-120	-200	-360	+540	0	-120	-200	-360
› 50	0	-350	-470	-500	-730	0	-540	-660	-660	-920
> 50	+400	0	-140	-240	-410	+630	0	-140	-240	-410
› 65	0	-400	-500	-500	-760	0	-630	-760	-780	-950

Black numbers = GO limit
Green numbers = NO-GO limit

[1]) DIN 7157 tolerance ranges are recommended.
Series 1 is preferable to Series 2

"Reproduced with permission of DIN Deutsches Institut für Normungen e.V.
The most recent edition of the standard available from Beuth Verlag GmbH, Burggrafenstrafle 4-10, 1000 Berlin 30 is the authoritative version"

Distributor direct NORELEM pentru Romania: Best TOOLS SRL
info@btools.ro | 0368.412.413 | www.btools.ro

ISO fits for standard shafts

DK 621.753.2(100) GERMAN STANDARDS August 1966

ISO fits for standard shafts

Tolerance ranges
dimensions in µm

DIN 7155
sheet 1

Tolerance examples for nominal diameter 60 mm

ID (bores) — OD (shafts) — Do not apply to nominal diameter 60 mm — Tolerance ranges acc. to DIN 7157 [1]: Series 1, Series 2

ISO -Fits for the shaft basis System. Tolerance zones, deviations
Ajustements ISO pour le système de l'arbre normal. Zones de tolérance, écarts

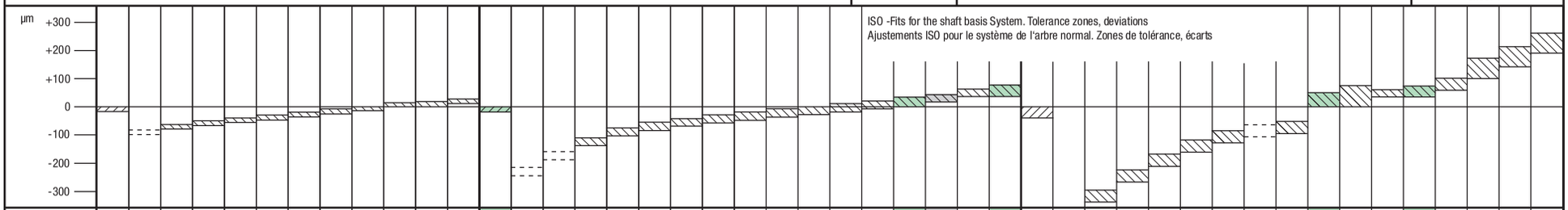

Nominal dimension range in mm	h5	U6	T6	S6	R6	P6	N6	M6	K6	J6	H6	G6	h6	ZA7	Z7	X7	U7	T7	S7	R7	P7	N7	M7	K7	J7	H7	G7	F7	F8	h8	ZC8	ZB8	ZA8	Z8	X8	U8	T8	S8	H8	H9	F7	F8	E8	D9	C9	B9
¡ 1	0	-18	—	-14	-10	-6	-4	-2	0	+2	+6	+8	0	-32	-26	-20	-18	—	-14	-10	-6	-4	-2	0	+4	+10	+12	+16	+20	0	-60	-40	—	-26	-20	—	—	-14	+14	+25	+16	+20	+28	+45	+85	+165
¢ 3	-4	-24		-20	-16	-12	-10	-8	-6	-4	0	+2	-6	-42	-36	-30	-28		-24	-20	-16	-14	-12	-10	-6	0	+2	+6	+6	-14	-74	-54		-40	-34			-28	0	0	+6	+6	+14	+20	+60	+140
> 3	0	-20	—	-16	-12	-9	-5	-1	+2	+5	+8	+12	0	-38	-31	-24	-19	—	-15	-11	-8	-4	0	+3	+6	+12	+16	+22	+28	0	-80	-50	—	-35	-28	—	—	-19	+18	+30	+22	+28	+38	+60	+100	+170
¢ 6	-5	-28		-24	-20	-17	-13	-9	-6	-3	0	+4	-8	-50	-43	-36	-31		-27	-23	-20	-16	-12	-9	-6	0	+4	+10	+10	-18	-98	-68		-53	-46			-37	0	0	+10	+10	+20	+30	+70	+140
> 6	0	-25	—	-20	-16	-12	-7	-3	+2	+5	+9	+14	0	-46	-36	-28	-22	—	-17	-13	-9	-4	0	+5	+8	+15	+20	+28	+35	0	-97	-67	-52	-42	-34	—	—	-23	+22	+36	+28	+35	+47	+76	+116	+186
¢ 10	-6	-34		-29	-25	-21	-16	-12	-7	-4	0	+5	-9	-61	-51	-43	-37		-32	-28	-24	-19	-15	-10	-7	0	+5	+13	+13	-22	-119	-89	-74	-64	-56			-45	0	0	+13	+13	+25	+40	+80	+150
> 10 ¢ 14	0	-30	—	-25	-20	-15	-9	-4	+2	+6	+11	+17	0	-57 -75	-43 -61	-33 -51	-26	—	-21	-16	-11	-5	0	+6	+10	+18	+24	+34	+43	0	-130 -157	-90 -117	-64 -91	-50 -77	-40 -67	—	—	-28	+27	+43	+34	+43	+59	+93	+138	+193
> 14 ¢ 18	-8	-41		-36	-31	-26	-20	-15	-9	-5	0	+6	-11	-70 -88	-53 -71	-38 -56	-44		-39	-34	-29	-23	-18	-12	-8	0	+6	+16	+16	-27	-150 -177	-108 -135	-77 -104	-60 -87	-45 -72			-55	0	0	+16	+16	+32	+50	+95	+150
> 18 ¢ 24	0	-37 -50	—	-31	-24	-18	-11	-4	+2	+8	+13	+20	0	—	-65 -86	-46 -67	-33 -54	—	-27	-20	-14	-7	0	+6	+12	+21	+28	+41	+53	0	-188 -221	-136 -169	-98 -131	-73 -106	-54 -87	—	—	-35	+33	+52	+41	+53	+73	+117	+162	+212
> 24 ¢ 30	-9	—	-37 -50	-44	-37	-31	-24	-17	-11	-5	0	+7	-13		-80 -101	-56 -77	-40 -61	-33 -54	-48	-41	-35	-28	-21	-15	-9	0	+7	+20	+20	-33	-218 -251	-160 -193	-118 -151	-88 -121	-64 -97	-48 -81		-68	0	0	+20	+20	+40	+65	+110	+160
> 30 ¢ 40	0	—	-43 -59	-38	-29	-21	-12	-4	+3	+10	+16	+25	0	—	-103 -128	-71 -96	-51 -76	-39 -64	-34	-25	-17	-8	0	+7	+14	+25	+34	+50	+64	0	—	-200 -239	-148 -187	-112 -151	-80 -119	-60 -99	—	-43	+39	+62	+50	+64	+89	+142	+182 +120	+232 +170
> 40 ¢ 50	-11		-49 -65	-54	-45	-37	-28	-20	-13	-6	0	+9	-16		—	-88 -113	-61 -86	-45 -70	-59	-50	-42	-33	-25	-18	-11	0	+9	+25	+25	-39		-242 -281	-180 -219	-136 -175	-97 -136	-70 -109		-82	0	0	+25	+25	+50	+80	+192 +130	+242 +180
> 50 ¢ 65	0	—	-60 -79	-47 -66	-35 -54	-26	-14	-5	+4	+13	+19	+29	0	—	—	-111 -141	-76 -106	-55 -85	-42 -72	-30 -60	-21	-9	0	+9	+18	+30	+40	+60	+76	0	—	-300 -346	-226 -272	-172 -218	-122 -168	-87 -133	—	-53 -99	+46	+74	+60	+76	+106	+174	+214 +140	+264 +190
> 65 ¢ 80	-13		—	-53 -72	-37 -56	-45	-33	-24	-15	-6	0	+10	-19			—	-91 -121	-64 -94	-48 -78	-32 -62	-51	-39	-30	-21	-12	0	+10	+30	+30	-46		—	-274 -320	-210 -256	-146 -192	-102 -148		—	-59 -105	0	0	+30	+30	+60	+100	+224 +150	+274 +200
> 80 ¢ 100	0	—	—	-64 -86	-44 -66	-30	-16	-6	+4	+16	+22	+34	0	—	—	—	-111 -146	-78 -113	-58 -93	-38 -73	-24	-10	0	+10	+22	+35	+47	+71	+90	0	—	—	-335 -389	-285 -312	-178 -232	-124 -178	—	-71 -125	+54	+87	+71	+90	+126	+207	+257 +170	+307 +220
> 100 ¢ 120	-15			—	-47 -69	-52	-38	-28	-18	-6	0	+12	-22				-131 -166	-91 -126	-66 -101	-41 -76	-59	-45	-35	-25	-13	0	+12	+36	+36	-54			—	-310 -364	-210 -264	-144 -198	-104 -158	-79 -133	0	0	+36	+36	+72	+120	+267 +180	+327 +240

Black numbers = GO limit
Green numbers = NO-GO limit
Fits for standard shaft, fit tolerances (clearances and interferences) see DIN 7155, sheet 2
Fits for standard borehole, see DIN 7154, sheet 1 and sheet 2

[1]) DIN 7157 tolerance ranges are recommended.
Series 1 is preferable to Series 2

Continued on page 2

Amended August 1966:
dimensions coordinated to
ISO recommendations ISO/R 286-1962

Previous editions: DIN 7155: 10.36
DIN 7155 sheet 1: 12.50, 9.56

"Reproduced with permission of DIN Deutsches Institut für Normungen e.V.
The most recent edition of the standard available from Beuth Verlag GmbH, Burggrafenstrafle 4-10, 1000 Berlin 30 is the authoritative version"

Beuth-Vertrieb GmbH, Berlin 30 and Cologne 8.66 have monopoly rights for sale of standard sheets

Distributor direct NORELEM pentru Romania: Best TOOLS SRL
info@btools.ro | 0368.412.413 | www.btools.ro

DIN 7155 sheet 1 page 2

Tolerance examples for nominal diameter 60 mm

ID (bores) — OD (shafts) — Do not apply to nominal diameter 60 mm — Tolerance ranges acc. to DIN 7157 [1]) — Series 1 — Series 2 — Dimensions in µm

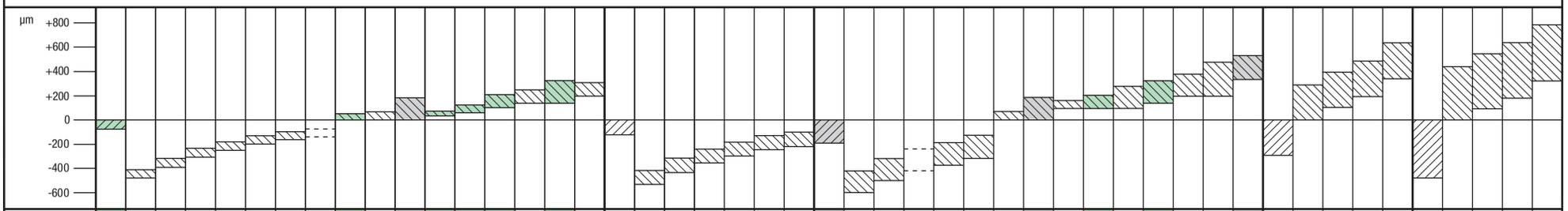

Nominal dimension range in mm	h9	ZC9	ZB9	ZA9	Z9	X9	U9	T9	H8	H9	H11	F8	E9	D10	C10	C11	B10	h10	ZC10	ZB10	ZA10	Z10	X10	U10
, 1	0	-60	-40	—	-26	-20	—	—	+14	+25	+60	+20	+39	+60	+100	+120	+180	0	-60	—	—	-26	—	—
™ 3	-25	-85	-65		-51	-45			0	0	0	+6	+14	+20	+60	+60	+140	-40	-100			-66		
> 3	0	-80	-50	—	-35	-28	—	—	+18	+30	+75	+28	+50	+78	+118	+145	+188	0	-80	—	—	-35	—	—
™ 6	-30	-110	-80		-65	-58			0	0	0	+10	+20	+30	+70	+70	+140	-48	-128			-83		
> 6	0	-97	-67	—	-42	-34	—	—	+22	+36	+90	+35	+61	+98	+138	+170	+208	0	-97	-67	—	-42	—	—
™ 10	-36	-133	-103		-78	-70			0	0	0	+13	+25	+40	+80	+80	+150	-58	-155	-125		-100		
> 10	0	-130	-90	—	-50	-40	—	—	+27	+43	+110	+43	+75	+120	+165	+205	+220	0	-130	-90	—	-50	—	—
™ 14		-173	-133		-93	-83													-200	-160		-120		
> 14	-43	-150	-108	—	-60	-45			0	0	0	+16	+32	+50	+95	+95	+150	-70	-150	-108	—	-60	-45	
™ 18		-193	-151		-103	-88													-220	-178		-130	-115	
> 18	0	-188	-136	-98	-73	-54	—	—	+33	+52	+130	+53	+92	+149	+194	+240	+244	0	-188	-136	—	-73	-54	—
™ 24		-240	-188	-150	-125	-106													-272	-220		-157	-138	
> 24	-52	-218	-160	-118	-88	-64	-48		0	0	0	+20	+40	+65	+110	+110	+160	-84	-218	-160	—	-88	-64	
™ 30		-270	-212	-170	-140	-116	-100												-302	-244		-172	-148	
> 30	0	-274	-200	-148	-112	-80	-60	—	+39	+62	+160	+64	+112	+180	+220	+280	+270	0	-274	-200	—	-112	-80	—
™ 40		-336	-262	-210	-174	-142	-122								+120	+120	+170		-374	-300		-212	-180	
> 40	-62	-325	-242	-180	-136	-97	-70		0	0	0	+25	+50	+80	+230	+290	+280	-100	-325	-242	-180	-136	-97	-70
™ 50		-387	-304	-242	-198	-159	-132								+130	+130	+180		-425	-342	-280	-236	-197	-170
> 50	0	-405	-300	-226	-172	-122	-87	—	+46	+74	+190	+76	+134	+220	+260	+330	+310	0	-405	-300	-226	-172	-122	-87
™ 65		-479	-374	-300	-246	-196	-161								+140	+140	+190		-525	-420	-346	-292	-242	-207
> 65	-74	—	-360	-274	-210	-146	-102		0	0	0	+30	+60	+100	+270	+340	+320	-120	-480	-360	-274	-210	-146	-102
™ 80			-434	-348	-284	-220	-179								+150	+150	+200		-600	-480	-394	-330	-266	-222
> 80	0	—	-445	-335	-258	-178	-124	—	+54	+87	+220	+90	+159	+260	+310	+390	+360	0	-585	-445	-335	-258	-178	-124
™ 100			-532	-422	-345	-265	-211								+170	+170	+220		-725	-585	-475	-398	-318	-264
> 100	-87		—	-400	-310	-210	-144		0	0	0	+36	+72	+120	+320	+400	+380	-140	-690	-525	-400	-310	-210	-144
™ 120				-487	-397	-297	-231								+180	+180	+240		-830	-665	-540	-450	-350	-284

Nominal dimension range in mm	h11	ZC11	ZB11	ZA11	Z11	X11	H9	H11	D9	D10	D11	C11	B11	B12	A11	h12	H12	D12	B12	A12	h13	H13	D13	B13	A13
, 1	0	-60	—	—	—	—	+25	+60	+45	+60	+80	+120	+200	+240	+330	0	+100	+120	+240	+370	0	+140	+160	+280	+410
™ 3	-60	-120					0	0	+20	+20	+20	+60	+140	+140	+270	-100	0	+20	+140	+270	-140	0	+20	+140	+270
> 3	0	-80	—	—	—	—	+30	+75	+60	+78	+105	+145	+215	+260	+345	0	+120	+150	+260	+390	0	+180	+210	+320	+450
™ 6	-75	-155					0	0	+30	+30	+30	+70	+140	+140	+270	-120	0	+30	+140	+270	-180	0	+30	+140	+270
> 6	0	-97	-67	—	—	—	+36	+90	+76	+98	+130	+170	+240	+300	+370	0	+150	+190	+300	+430	0	+220	+260	+370	+500
™ 10	-90	-187	-157				0	0	+40	+40	+40	+80	+150	+150	+280	-150	0	40	+150	+280	-220	0	+40	+150	+280
> 10	0	-130	-90	—	—	—	+43	+110	+93	+120	+160	+205	+260	+330	+400	0	+180	+230	+330	+470	0	+270	+320	+420	+560
™ 14		-240	-200																						
> 14	-110	-150	-108				0	0	+50	+50	+50	+95	+150	+150	+290	-180	0	+50	+150	+290	-270	0	+50	+150	+290
™ 18		-260	-218																						
> 18	0	-188	-136	—	—	—	+52	+130	+117	+149	+195	+240	+290	+370	+430	0	+210	+275	+370	+510	0	+330	+395	+490	+630
™ 24		-318	-266																						
> 24	-130	-218	-160	—	-88		0	0	+65	+65	+65	+110	+160	+160	+300	-210	0	+65	+160	+300	-330	0	65	+160	+300
™ 30		-348	-290		-218																				
> 30	0	-274	-200	—	-112		+62	+160	+142	+180	+240	+280	+330	+420	+470	0	+250	+330	+420	+560	0	+390	+470	+560	+700
™ 40		-434	-360		-272	—						+120	+170	+170	+310				+170	+310				+170	+310
> 40	-160	-325	-242	—	-136		0	0	+80	+80	+80	+290	+340	+430	+480	-250	0	+80	+430	+570	-390	0	+80	+570	+710
™ 50		-485	-402		-296							+130	+180	+180	+320				+180	+320				+180	+320
> 50	0	-405	-300	—	-172	-122	+74	+190	+174	+220	+290	+330	+380	+490	+530	0	+300	+400	+490	+640	0	+460	+560	+650	+800
™ 65		-595	-490		-362	-312						+140	+190	+190	+340				+190	+340				+190	+340
> 65	-190	-480	-360	—	-210	-146	0	0	+100	+100	+100	+340	+390	+500	+550	-300	0	+100	+500	+660	-460	0	+100	+660	+820
™ 80		-670	-550		-400	-336						+150	+200	+200	+360				+200	+360				+200	+360
> 80	0	-585	-445	—	-258	-178	+87	+220	+207	+260	+340	+390	+440	+570	+600	0	+350	+470	+570	+730	0	+540	+660	+760	+920
™ 100		-805	-665		-478	-398						+170	+220	+220	+380				+220	+380				+220	+380
> 100	-220	-690	-525	-400	-310	-210	0	0	+120	+120	+120	+400	+460	+590	+630	-350	0	+120	+590	+760	-540	0	+120	+780	+950
™ 120		-910	-745	-620	-530	-430						+180	+240	+240	+410				+240	+410				+240	+410

Black numbers = GO limit
Green numbers = NO-GO limit

[1]) DIN 7157 tolerance ranges are recommended.
Series 1 is preferable to Series 2

"Reproduced with permission of DIN Deutsches Institut für Normungen e.V.
The most recent edition of the standard available from Beuth Verlag GmbH, Burggrafenstrafle 4-10, 1000 Berlin 30 is the authoritative version"

Technical Information
General tolerances. Surface finishes

- norelem products are adapted and manufactured in such a way that they are suitable for their general purpose with reference to material and surface finish. As such, they meet all normal tolerance requirements.
- All dimensions are indicated in mm.
- All weights are approx. data.
- The latest DIN standard sheet version applies to all parts made to DIN standards.
- Variations on dimensions without tolerance values are according to „DIN ISO 2768-mk“ (except linear dimensions of grey cast iron- and Al-profiles).

General Tolerances DIN ISO 2768 T1 and T2

General Tolerances for Linear and Angular Dimensions — DIN ISO 2768 T1

Tolerance class		Linear Dimensions							
		Permissible deviations in mm for ranges of nominal sizes							
designation	description	0,5 to 3	over 3 to 6	over 6 to 30	over 30 to 120	over 120 to 400	over 400 to 1000	over 1000 to 2000	over 2000 to 4000
f	fine	± 0,05	± 0,05	± 0,1	± 0,15	± 0,2	± 0,3	± 0,5	–
m	medium	± 0,10	± 0,10	± 0,2	± 0,30	± 0,5	± 0,8	± 1,2	± 2
c	coarse	± 0,20	± 0,30	± 0,5	± 0,80	± 1,2	± 2,0	± 3,0	± 4
v	very coarse	–	± 0,50	± 1,0	± 1,50	± 2,5	± 4,0	± 6,0	± 8

Tolerance class		External Radii and Chamfer Heights			Angular Dimensions				
		Permissible deviations in mm for ranges of nominal sizes			Permissible deviations in degrees or minutes for ranges of nominal sizes (shorten leg)				
designation	description	0,5 to 3	over 3 to 6	over 6	to 10	over 10 to 50	over 50 to 120	over 120 to 400	over 400
f	fine	± 0,2	± 0,5	± 1	± 1°	± 0°30‘	± 0°20‘	± 0°10‘	± 0° 5‘
m	medium								
c	coarse	± 0,4	± 1,0	± 2	± 1°30‘	± 1°30‘	± 0°30‘	± 0°15‘	± 0°10‘
v	very coarse				± 3°30‘	± 2°30‘	± 1°30‘	± 0°30’	± 0°20‘

General Tolerances for Form and Position — DIN ISO 2768 T2

Tolerance class	Tolerances in mm for Straightness and Flatness						Perpendicularity				Symmetry				Run-out
	Ranges of nominal sizes in mm						Ranges of nominal sizes in mm				Ranges of nominal sizes in mm				
	to 10	over 10 to 30	over 30 to 100	over 100 to 300	over 300 to 1000	over 1000 to 3000	to 100	over 100 to 300	over 300 to 1000	over 1000 to 3000	to 100	over 100 to 300	over 300 to 1000	over 1000 to 3000	
H	0,02	0,05	0,1	0,2	0,3	0,4	0,2	0,3	0,4	0,5	0,5				0,1
K	0,05	0,10	0,2	0,4	0,6	0,8	0,4	0,6	0,8	1,0	0,6		0,8	1	0,2
L	0,10	0,20	0,4	0,8	1,2	1,6	0,6	1,0	1,5	2,0	0,6	1,0	1,5	2	0,5

Method of Indicating Surface Finish to DIN ISO 1302

Graphical symbol of surface finish to DIN 3141	Surface finish values, R_a for permissible roughness height R_t assignation according to DIN 3141 line 1 / line 2	meaning according to ISO 1302
(Surface without graphical symbol)		Surfaces which do not need to meet specific requirements
	even	Surfaces which only have to meet requirements of general evenness and better appearance
	rough	Individual raw surfaces which may be remachined
	6,3	Clean raw surface with higher requirements
	25 / 12,5	Surface with a roughness value which must not exceed the highest permissible medium roughness value
	6,3 / 3,2	
	1,6 / 0,8	

Technical Information
Screws and Nuts

The values for clamping forces F_{sp} and tightening torques M_{sp} specified in the table apply to standard metric thread according to DIN 13 and head contact surfaces according to DIN 912, 931-934, 6912, 7984, 7990.

The F_{sp} clamping force values result in a 90% utilisation of yield point σ 0.2 (DIN 267 pg. 3) subject to the respective coefficient of friction in threads.

It can be inferred from the table which screw with which quality is required for a particular coefficient of friction in thread in order to apply a given F_M assembly force ($F_{sp} >= F_M$).

The M_{sp} tightening torques are calculated based on the F_{sp} clamping forces assuming $\mu_G = \mu_K = \mu_{ges}$.

Determination of the M_{sp} tightening torque at 90 % yield point utilisation for a screw specified in size and quality is made according to the table at the right subject to the underhead friction occurring (μ_K), irregardless of a coefficient of friction in thread deviating from it.

To attain the applicable rated load torque it is still necessary to reduce half the spread of the designated torque wrench by the particular tightening torque M_{sp}.

Calculation of the table values and information for applications according to VDI guideline 2230.

Clamping force and tightening torques

Standard thread	μ_{total}* = μ_G = μ_K	Set screws clamping force F_{sp} in kN by grade 8.8	10.9	12.9	tightening torque M_{sp} in Nm by grade 8.8	10.9	12.9
M4	0,08	4,40	6,40	7,5	2,2	3,2	3,8
	0,10	4,20	6,20	7,3	2,5	3,7	4,3
	0,12	4,05	6,00	7,0	2,8	4,1	4,8
	0,14	3,90	5,70	6,7	3,1	4,5	5,3
M5	0,08	7,16	10,50	12,3	4,3	6,3	7,3
	0,10	6,90	10,10	11,9	4,9	7,2	8,5
	0,12	6,63	9,74	11,4	5,5	8,1	9,5
	0,14	6,36	9,34	10,9	6,0	8,9	10,4
M6	0,08	10,10	14,90	17,4	7,4	10,9	12,7
	0,10	9,74	14,30	16,7	8,5	12,5	14,7
	0,12	9,35	13,70	16,1	9,5	14,0	16,4
	0,14	8,97	13,20	15,4	10,4	15,3	17,9
M8	0,08	18,50	27,20	31,9	17,9	26,2	30,7
	0,10	17,90	26,20	30,7	20,6	30,3	35,5
	0,12	17,20	25,20	29,5	23,1	34,0	39,7
	0,14	16,50	24,20	28,3	25,3	37,2	43,6
M10	0,08	29,50	43,30	50,7	36,0	53,0	61,0
	0,10	28,40	41,80	48,9	41,0	61,0	71,0
	0,12	27,30	40,20	47,0	46,0	68,0	80,0
	0,14	26,20	38,50	45,1	51,0	75,0	88,0
M12	0,08	43,00	63,10	73,9	61,0	90,0	105,0
	0,10	41,40	60,90	71,2	71,0	104,0	122,0
	0,12	39,90	58,50	68,5	80,0	117,0	137,0
	0,14	38,30	56,20	65,8	87,0	128,0	150,0

Standard thread	μ_{total}* = μ_G = μ_K	Set screws clamping force F_{sp} in kN by grade 8.8	10.9	12.9	tightening torque M_{sp} in Nm by grade 8.8	10.9	12.9
M14	0,08	59,0	86,7	101,0	97	143	167
	0,10	56,9	83,6	97,8	113	165	194
	0,12	54,7	80,4	94,1	127	186	218
	0,14	52,6	77,2	90,3	139	205	239
M16	0,08	81,0	119,0	139,0	147	216	253
	0,10	78,2	115,0	134,0	172	252	295
	0,12	75,3	111,0	130,0	194	285	333
	0,14	72,4	106,0	124,0	214	314	367
M20	0,08	131,0	186,0	218,0	298	424	496
	0,10	126,0	180,0	210,0	347	494	578
	0,12	121,0	173,0	202,0	392	558	653
	0,14	117,0	166,0	194,0	431	615	719
M24	0,08	188,0	268,0	313,0	512	730	854
	0,10	182,0	259,0	303,0	597	850	995
	0,12	175,0	249,0	291,0	673	959	1122
	0,14	168,0	239,0	280,0	742	1057	1237
M30	0,08	300,0	430,0	500,0	1000	1450	1700
	0,10	290,0	415,0	485,0	1190	1700	2000
	0,12	280,0	400,0	465,0	1350	1900	2250
	0,14	270,0	385,0	450,0	1500	2100	2500
M36	0,08	440,0	630,0	730,0	1750	2500	3000
	0,10	425,0	600,0	710,0	2100	3000	3500
	0,12	410,0	580,0	680,0	2350	3300	3900
	0,14	395,0	560,0	660,0	2600	3700	4300

Screw stability according to DIN ISO 20898 T 1 (4.92)

Grades	5.8	6.8	8.8	10.9	12.9
Minimum tensile strength R_m N/mm²	500	600	800	1000	1200
Minimum yield point R_e N/mm²	400	480	640	900	1080
0.2-proof stress $R_{p0,2}$ N/mm²	–	–	640	900	1080
Test stress S_p N/mm²	364	440	582	792	950
Failure strain A_5 %	10	8	12	9	8
Impact strength (ISO test piece) Nm/cm²	–	–	60	40	30

The respective grades mean (as shown with 8.8):

$$\text{First number 8.} = \frac{\text{minimum tensile strength } R_m}{100} = 800 \text{ N/mm}^2$$

$$\text{Second number .8} = \frac{\text{minimum yield point } R_e}{\text{minimum tensile strength } R_m} \cdot 10 = 640 \text{ N/mm}^2 \text{ (80 \% von } R_m)$$

Nut stability according to DIN ISO 20898 T 2 (2.94)

Grade ID numbers	5	6	8	10	12
Test stress S_p N/mm²	500	600	800	1000	1200

The grades mean (as shown with 10):

$$10 = \frac{\text{test stress } S_p}{100}$$

This test stress is equal to the minimum tensile strength of a screw that can be loaded when pairing with the corresponding nut up to the minimum yield point of the screw.

Technical Information
Screws and Nuts

The coefficients of friction (see table) fluctuate over a wide range. They fluctuate even when tightening and by production run of the same screws.
Because μ_G and μ_K are generally of different sizes a wide range of tightening torques arise as a result.
Calculation is performed using various coefficients of friction in accordance with VDI guideline 2230. By contrast Illgner/Blume in their „Schrauben Vademecum“ calculate using a coefficient of friction $\mu_{ges} = \mu_G = \mu_K$.

Here it proceeds according to VDI methods. However if μ_G and/or μ_K are unknown,
$\mu_G = 0{,}12$ or $\mu_K = 0{,}12$ would typically be used.

Coefficient of friction μ_G in the thread (according to Strelow or VDI 2230)

μ_G	Thread				External thread (screw)								
Thread	Material				Steel								
		Surface			black tempered or phosphated				electro zinc-plated (Zn6)		electro cadmium-plated (Cd6)		adhesive
			Tapping		rolled			machine-cut	machine-cut or rolled				
			Tapping	lubrication	dry	lubricated	MoS_2*	lubricated	dry	lubricated	dry	lubricated	dry
Internal thread (nut)	Steel	bright	machine-cut	dry	0,12	0,10*	0,08	0,10	–	0,10	–	0,08	0,16
	Steel	electro cadmium-plated	machine-cut	dry	0,10	–	–	–	0,12	0,10	–	–	0,14
	Steel	electro cadmium-plated	machine-cut	dry	0,08	–	–	–	–	–	0,12	0,12	–
	GJL/GJMB	bright	machine-cut	dry	–	0,10	–	0,10	–	0,10	–	0,08	–
	AlMg	bright	machine-cut	dry	–	0,08	–	–	–	–	–	–	–

* Molybdenum disulfide

Coefficient of friction μ_K on the head or nut engaging surface (according to Strelow or VDI 2230)

μ_K	Support suface				Screw head									
Support suface	Material				Steel									
		Surface			black tempered or phosphated						electro zinc-plated (Zn6)		electro cadmium-plated (Cd6)	
			Manufacture		pressed			turned		smoothed	pressed			
			Manufacture	lubrication	dry	lubricated	MoS_2*	lubricated	MoS_2*	lubricated	dry	lubricated	dry	lubricated
Counter support	Steel	bright	smoothed	dry	–	0,16	–	0,10	–	0,16	0,10	–	0,08	–
	Steel	bright	machined	dry	0,12	0,10	0,08	0,10	0,08	–	0,10		0,08	0,08
	Steel	electro cadmium-plated	machined	dry	0,10		–	0,10	–	0,10	0,16	0,10	–	–
	Steel	electro cadmium-plated	machined	dry	0,08						–	–	0,12	0,12
	GJL/GJMB	bright	smoothed	dry	–	0,10	–	–	–	0,10 to 0,18			0,08	–
	GJL/GJMB	bright	machined	dry	–	0,14	–	0,10	–	0,14	0,10	0,10	0,08	–
	AlMg	bright	machined	dry	–	0,08				–	–	–	–	–

* Molybdenum disulfide

Metric ISO Threads

The medium tolerance class applies to the threads listed, i.e. 6H for nut threads and 6g for bolt threads. The (metal) threads in this catalogue are manufactured according to these tolerance classes.

Technical Information about threads of aluminium grips:

Especially threads of aluminium grips cannot be true to gauge size due to final surface finish refinement and the removal of material during related pretreatment.
The majority of these threads are moulded in order to strengthen the material. As a result, the tearing resistance of aluminium for a thread with M5 x 10 is higher than 2000 N.

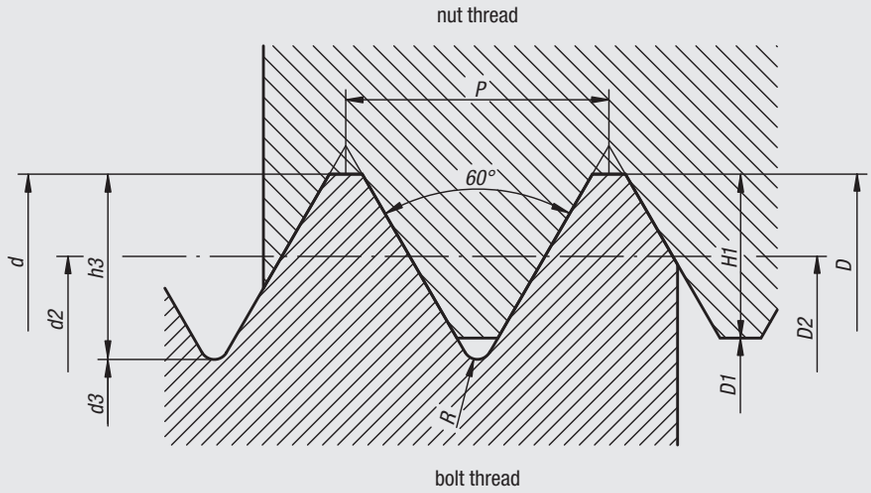

Coarse thread series 1

Thread description	Pitch	Thread-pitch Ø	Minor Ø		Thread depth		Radius	Core hole drill
			bolt	nut	bolt	nut		
d = D	P	d2 = D2	d3	D1	h3	H1	R	Ø
M 3	0,50	2,68	2,39	2,46	0,31	0,27	0,07	2,5
M 4	0,70	3,55	3,14	3,24	0,43	0,38	0,10	3,3
M 5	0,80	4,48	4,02	4,13	0,49	0,43	0,12	4,2
M 6	1,00	5,35	4,77	4,92	0,61	0,54	0,14	5,0
M 8	1,25	7,19	6,47	6,65	0,77	0,68	0,18	6,8
M10	1,50	9,03	8,16	8,38	0,92	0,81	0,22	8,5
M12	1,75	10,86	9,85	10,11	1,07	0,95	0,25	10,2
M16	2,00	14,70	13,55	13,84	1,23	1,08	0,29	14,0
M20	2,50	18,38	16,93	17,29	1,53	1,35	0,36	17,5
M24	3,00	22,05	20,32	20,75	1,84	1,62	0,43	21,0
M30	3,50	27,73	25,71	26,21	2,15	1,89	0,51	26,5
M36	4,00	33,40	31,09	31,67	2,45	2,17	0,58	32,0

Threads
Threads are manufactured to ISO DIN 13 medium tolerance class, i.e. 6H for nut threads and 6g for bolt threads. External threads up to 60 mm are generally supplied fully threaded. Screw lengths of 70 mm and more are supplied with 60 mm long threads.

Spot facing for countersunk screws and socket head screws

Spot facing model B:
– for countersunk screws DIN 7991.
Spot facing model J:
– for socket head screws DIN 6912.
Spot facing model K:
– for socket head screws DIN 912.

Note:
* Clearance hole medium according to DIN ISO 273.
** Clearance hole fine according to DIN ISO 273.
*** 90° counterbore or rounded, under 12 mm thread diameter only deburred.

Form A
Medium version (m)

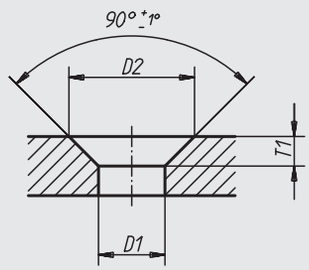

Form B
Fine version (f)

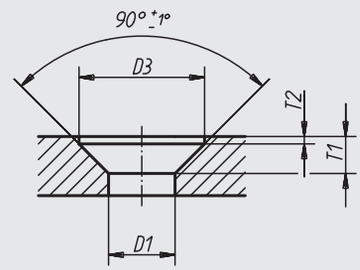

For Thread Ø	medium (m) version			fine (f) versions			
	D1 H13*	D2 H13	T1 ≈	D1 H12**	D3 H12	T1 ≈	T2 +0,1
M3	3,4	6,6	1,6	3,2	6,3	1,7	0,2
M4	4,5	9,0	2,3	4,3	8,3	2,4	0,4
M5	5,5	11,0	2,8	5,3	10,4	2,9	0,5
M6	6,6	13,0	3,2	6,4	12,4	3,3	0,5
M8	9,0	17,2	4,1	8,4	16,5	4,4	0,5
M10	11,0	21,5	5,3	10,5	20,5	5,5	0,5
M12	13,5	25,5	6,0	13,0	25,0	6,5	0,5
M16	17,5	31,5	7,0	17,0	31,0	7,5	0,5
M20	22,0	38,0	8,0	21,0	37,0	8,5	0,5

Form J, Form K

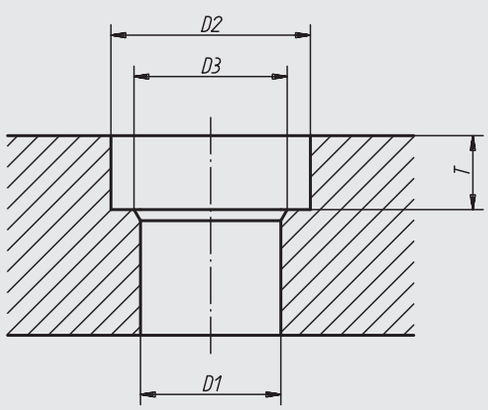

For Thread Ø	D1 medium (m) H13*	D1 fine (f) H12**	D2	D3***	T model J	T model K	acceptable deviation
M3	3,4	3,2	6	–	–	3,4	+0,2 0
M4	4,5	4,3	8	–	3,4	4,6	+0,4 0
M5	5,5	5,3	10	–	4,2	5,7	+0,4 0
M6	6,6	6,4	11	–	4,8	6,8	+0,4 0
M8	9,0	8,4	15	–	6,0	9,0	+0,4 0
M10	11,0	10,5	18	–	7,5	11,0	+0,4 0
M12	13,5	13,0	20	16	8,5	13,0	+0,4 0
M16	17,5	17,0	26	20	11,5	17,5	+0,4 0
M20	22,0	21,0	33	24	13,5	21,5	+0,4 0

DIN 78 thread ends
DIN 6332 thrust points

FL flat point

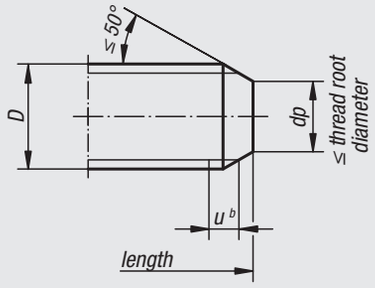

RN rounded end

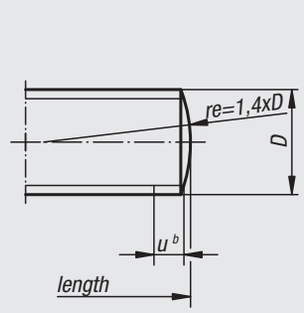

SD short dog

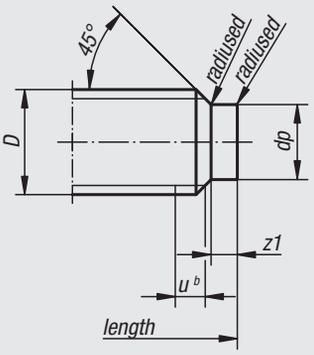

LD long dog

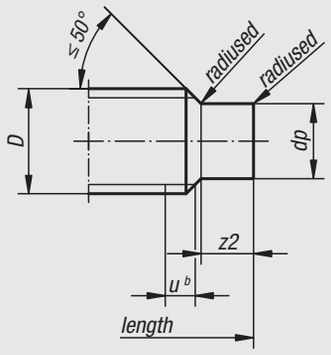

TC truncated cone

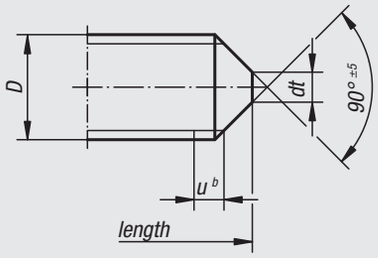

Standard form:
DIN EN ISO 4753 flat point.
Any other thread end available at extra cost, depending on the quantity ordered.

u^b = max. 2P incomplete thread

Ak rounded dog

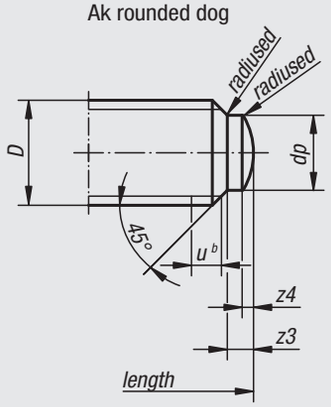

thrust point DIN 6332

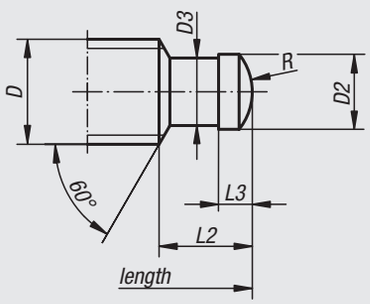

Thread- Ø	Thread ends to DIN EN ISO 4753						Thread ends with thrust points to DIN 6332				
D	dp h13	dt h16*	z1 + IT14	z2 + IT14	z3 + IT14	z4 ≈	D2 h11	D3 –0,1	L2	L3	R
M4	2,5	–	1,00	2,0	1,00	0,50	–	–	–	–	–
M5	3,5	–	1,25	2,5	1,25	0,60	–	–	–	–	–
M6	4,0	1,5	1,50	3,0	1,50	0,70	4,5	4,0	6,0	2,5	3
M8	5,5	2,0	2,00	4,0	2,00	1,00	6,0	5,4	7,5	3,0	5
M10	7,0	2,5	2,50	5,0	2,50	1,00	8,0	7,2	9,0	4,5	6
M12	8,5	3,0	3,00	6,0	3,00	1,25	8,0	7,2	10,0	4,5	6
M14	10,0	4,0	3,50	7,0	3,50	1,50	–	–	–	–	–
M16	12,0	4,0	4,00	8,0	4,00	1,75	12,0	11,0	12,0	5,0	9
M18	13,0	5,0	4,50	9,0	4,50	2,00	–	–	–	–	–
M20	15,0	5,0	5,00	10,0	5,00	2,00	15,5	14,4	14,0	5,5	13
M22	17,0	6,0	5,50	11,0	5,50	2,50	–	–	–	–	–
M24	18,0	6,0	6,00	12,0	6,00	2,50	–	–	–	–	–
M27	21,0	8,0	6,70	13,5	6,70	3,00	–	–	–	–	–

* Point up to 5 mm Ø thread end lightly flattened or lightly rounded.

DIN 79

Squares ends for spindles and operating parts

* Internal squares are allowed to be recessed in the middle third of each side. D max. defines the borehole diameter which leaves appropriate clearance when disposed concentrically to the internal square.

** External squares made on round steel bar may fall below the minimum size by the amount of tolerance on the steel bar, i.e. by h11.

A External square

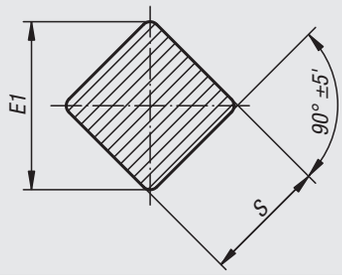

B Internal square

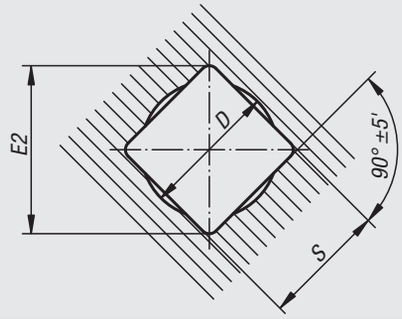

S H11/h11	D* max.	E1 max.	E1 min.**	E2 min.
4,0	4,2	5,0	4,8	5,3
5,0	5,3	6,5	6,0	6,6
5,5	5,8	7,0	6,6	7,2
6,0	6,3	8,0	7,2	8,1
7,0	7,3	9,0	8,4	9,1
8,0	8,4	10,0	9,6	10,1
9,0	9,5	12,0	10,8	12,1
10,0	10,5	13,0	12,0	13,1
11,0	11,6	14,0	13,2	14,1
12,0	12,6	16,0	14,4	16,1
13,0	13,7	17,0	15,6	17,1
14,0	14,7	18,0	16,8	18,1
16,0	16,8	21,0	19,2	21,2
17,0	17,9	22,0	20,4	22,2
19,0	20,0	25,0	22,8	25,2
22,0	23,1	28,0	26,4	28,2

DIN 650

T-slots

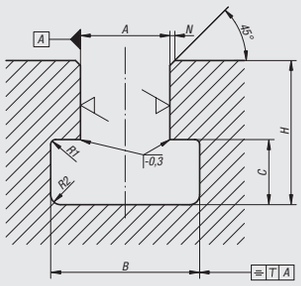

6.3 (= 1.6 for tolerance H8 or = 3.2 for tolerance H12)

A*	B	B adm. dev.	C	C adm. dev.	H max.	H min.	N max.	R1 max.	R2 max.	T
6	11,0	+1,5 0	5	+1 0	13	11	1,0	0,6	1,0	0,5
8	14,5		7		18	15				
10	16,0	+2 0	7		21	17				
12	19,0		8		25	20				
14	23,0		9	+2 0	28	23	1,6		1,6	
18	30,0		12		36	30		1,0		
22	37,0	+3 0	16		45	38			2,5	
28	46,0	+4 0	20		56	48				
36	56,0		25	+3 0	71	61	2,5			1,0
42	68,0		32		85	74		1,6	4,0	

* Tolerance H8 for tenon and clamping slots, H12 for clamping slots

Keyways and parallel keys

high form (sheet 1), high form for machine tools (sheet 2)

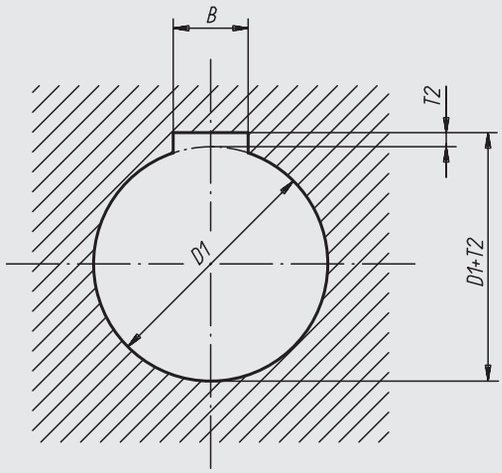

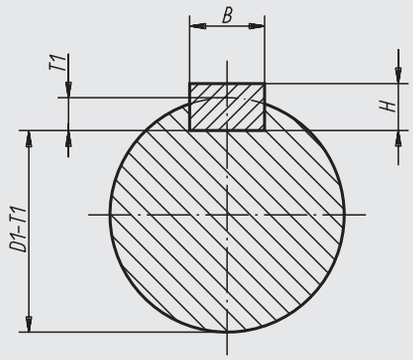

high form (sheet 1)

For shaft Ø D1	Shaft slot B* tight fit P9	Shaft slot B* sliding fit N9	Hub slot B* tight fit P9	Hub slot B* sliding fit JS9	H	T1 with top clearance	T2 by top clearance	T2 oversize
over 8 to 10	3	3	3	3	3	1,8 +0,1	1,4 +0,1	0,9 +0,1
over 10 to 12	4	4	4	4	4	2,5 +0,1	1,8 +0,1	1,2 +0,1
over 12 to 17	5	5	5	5	5	3,0 +0,1	2,3 +0,1	1,7 +0,1
over 17 to 22	6	6	6	6	6	3,5 +0,1	2,8 +0,1	2,2 +0,1
over 22 to 30	8	8	8	8	7	4,0 +0,2	3,3 +0,2	2,4 +0,2
over 30 to 38	10	10	10	10	8	5,0 +0,2	3,3 +0,2	2,4 +0,2
over 38 to 44	12	12	12	12	8	5,0 +0,2	3,3 +0,2	2,4 +0,2
over 44 to 50	14	14	14	14	9	5,5 +0,2	3,8 +0,2	2,9 +0,2
over 50 to 58	16	16	16	16	10	6,0 +0,2	4,3 +0,2	3,4 +0,2

high form for machine tools (sheet 2)

For shaft Ø D1	Shaft slot B* tight fit P9	Shaft slot B* sliding fit N9	Hub slot B* tight fit P9	Hub slot B* sliding fit JS9	H	T1	T2
over 10 to 12	4	4	4	4	4	3,0 +0,1	1,1 +0,1
over 12 to 17	5	5	5	5	5	3,8 +0,1	1,3 +0,1
over 17 to 22	6	6	6	6	6	4,4 +0,1	1,7 +0,1
over 22 to 30	8	8	8	8	7	5,4 +0,2	1,7 +0,2
over 30 to 38	10	10	10	10	8	6,0 +0,2	2,1 +0,2
over 38 to 44	12	12	12	12	8	6,0 +0,2	2,1 +0,2
over 44 to 50	14	14	14	14	9	6,0 +0,2	2,6 +0,2
over 50 to 58	16	16	16	16	10	7,5 +0,2	2,6 +0,2

* The indicated tolerances for slot widths apply, as a rule, for milled slots.
ISO quality IT8 (i.e. P8 instead of P9, N8 instead of N9 and JS8 instead of JS9) are recommended for the width of broached slots.
Tolerance H9 for the shaft keyway and D10 for the hub keyway are recommended for sliding fits.

ESD

Sensitive electrical or electronic equipment, components and devices (ESD sensitive elements) may be damaged or destroyed by electrostatic discharges (ESD) in the immediate vicinity.

Electrostatic discharges can come from people or through handling ESD sensitive components (e.g. during production, assembly, transport, storage etc).

Electrically conductive products which conform to
DIN EN 61340-5-1 – Protection of electronic devices from electrostatic phenomena –
are essential within electronic environments to prevent an electrostatic discharge.

Our products are manufactured from a special, electrically conductive plastic and can therefore be used for ESD applications or in ESD protection areas (EPA) in accordance with DIN EN 61340-5-1.

These high-quality products are regularly tested by us to assess their electrical conductivity in accordance with DIN EN 61340-5-1.

The yellow ESD logo is printed on the side of the product to clearly identify it.

These ESD products can also be used for devices, components and protection systems in areas with high risk of explosion.

Use of these ESD products prevents the occurrence of electrostatic spark discharges, eliminating the potential ignition of gases and dusts which could lead to explosions in enclosed spaces.

Manufacturers and operators must use and conform to ATEX directives for the protection of persons working in areas with high risk of explosion.

These ESD products are certified by TÜV-Süd in relation to their electrical discharge capability accordance with
EN 60079-0:2012+A11:2013 Areas with high risk of explosion-Operating material-General requirements.

Target groups:

Device manufacturers required to conform to ATEX product directive 2014/34/EU.
Operators required to conform to ATEX worker protection directive 1999/92/EC.

Notes

Index

0-9		Page
5-axis clamping system compact jaw plate, smooth	BOOK 2	1114
5D workpiece stops	BOOK 1	216

A		Page
Accessories for concentricity gauges	BOOK 2	1062
Accessories for stepper motors with integrated positioning control	BOOK 2	1176
Acrylic glass panels	BOOK 2	1261
Adapter block aluminium	BOOK 1	602
Adapter for collet	BOOK 1	331
Adapter plates for clamping elements	BOOK 2	263
Adapter plates round	BOOK 1	603
Adapter plates, aluminium	BOOK 2	86
Adapter shafts	BOOK 2	1126
Adapters for swing clamp	BOOK 1	661
Adjustable heel supports for clamp strap assembly	BOOK 1	444
Adjustable holder for fixed centres	BOOK 2	1096
Adjustable latches heavy-duty version	BOOK 1	620
Adjusting knobs with position indicator digital display	BOOK 2	329
Adjustment nuts	BOOK 1	1151
Adjustment units	BOOK 2	1045
Aluminium profiles 16x40 Type I	BOOK 1	1263
Aluminium profiles 30x30 light Type I	BOOK 1	1259
Aluminium profiles 30x30 Type B	BOOK 1	1266
Aluminium profiles 30x60 light Type I	BOOK 1	1259
Aluminium profiles 30x60 Type B	BOOK 1	1266
Aluminium profiles 40x40 for roller rails, Type B	BOOK 1	1272
Aluminium profiles 40x40 for roller rails, Type I	BOOK 1	1265
Aluminium profiles 40x40 light Type B	BOOK 1	1267
Aluminium profiles 40x40 light Type I	BOOK 1	1261
Aluminium profiles 40x40 Type I	BOOK 1	1263
Aluminium profiles 40x80 light Type B	BOOK 1	1267
Aluminium profiles 40x80 light Type I	BOOK 1	1261
Aluminium profiles 40x80 Type I	BOOK 1	1264
Aluminium profiles 45x45 light Type B	BOOK 1	1268
Aluminium profiles 45x45 Type B	BOOK 1	1270
Aluminium profiles 45x60 Type B	BOOK 1	1270
Aluminium profiles 45x90 light Type B	BOOK 1	1268
Aluminium profiles 45x90 Type B	BOOK 1	1271
Aluminium profiles 60x60 light Type I	BOOK 1	1260
Aluminium profiles 80x80 light Type I	BOOK 1	1262
Aluminium profiles 80x80 Type I	BOOK 1	1264
Aluminium profiles 90x90 light Type B	BOOK 1	1269
Aluminium profiles 90x90 Type B	BOOK 1	1271
Aluminium profiles Connectors Covers Special elements	BOOK 1	1257
Aluminium profiles D50 Type I, tube	BOOK 1	1265
Angle bracket	BOOK 1	675
Angle bracket for ball catch	BOOK 1	205
Angle bracket for clamping elements	BOOK 2	482
Angle bracket for magnetic lock	BOOK 1	207
Angle brackets	BOOK 2	814
Angle elements T1 Type I	BOOK 1	1290
Angle elements T2 Type I	BOOK 1	1291
Angle plates	BOOK 2	173
Angle plates aluminium	BOOK 1	73
Angle plates with or without T-slots cast iron	BOOK 1	72
Angle profiles 45° grey cast iron	BOOK 1	87
Angle profiles 60° grey cast iron	BOOK 1	87
Angle sets Type B	BOOK 1	1289
Angle sets Type I	BOOK 1	1288
Angle, steel open	BOOK 1	581
Angles	BOOK 1	1286
Angular contact ball bearing FAG single-row	BOOK 2	664
Application equipment	BOOK 2	1286
„Arness“ accessories	BOOK 1	509
Assembly tool, steel, for self-tapping threaded inserts type B	BOOK 1	1284
Assembly tools for self-tapping threaded inserts	BOOK 1	1160
Atlas jack with locknut	BOOK 1	147
Axial angular contact ball bearing, steel double-row	BOOK 2	666-667
Axial angular contact ball bearing, steel double-row, with flange	BOOK 2	668-669
Axial ball bearing FAG single direction	BOOK 2	673
Axial joints for tractive forces adjustable	BOOK 2	818-819
Axial joints similar to DIN 71802	BOOK 2	816

B		Page
Backstop elements, steel for roller rails	BOOK 1	1306
Ball catch	BOOK 1	204
Ball chains	BOOK 2	1236
Ball grips revolving	BOOK 1	831
Ball handles DIN 6337	BOOK 1	847
Ball head screw in Hygienic DESIGN	BOOK 1	1091
Ball holders	BOOK 2	1099
Ball joints DIN 71802	BOOK 2	811
Ball knobs smooth DIN 319 enhanced	BOOK 1	772-773
Ball knobs stainless steel or aluminium DIN 319	BOOK 1	771
Ball knobs thermoplastic DIN 319 enhanced	BOOK 1	770
Ball lock pins	BOOK 1	352, 406
Ball lock pins stainless steel	BOOK 1	353, 397
Ball lock pins stainless steel, with headend lock	BOOK 1	399, 412
Ball lock pins with grip ring stainless steel	BOOK 1	355
Ball lock pins with high shear strength	BOOK 1	407
Ball lock pins with L-grip	BOOK 1	359, 408
Ball lock pins with L-grip stainless steel, with head-end lock	BOOK 1	413
Ball lock pins with L-grip with high shear strength	BOOK 1	409, 417
Ball lock pins with mushroom grip stainless steel	BOOK 1	354, 400
Ball lock pins with mushroom grip stainless steel, adjustable	BOOK 1	402-403
Ball lock pins with mushroom grip stainless steel, with high shear strength	BOOK 1	401
Ball lock pins with mushroom grip stainless steel, with high shear strength, adjustable	BOOK 1	404-405
Ball lock pins with T-grip	BOOK 1	358, 410
Ball lock pins with T-grip stainless steel, with head-end lock	BOOK 1	414
Ball lock pins with T-grip with high shear strength	BOOK 1	411, 419
Ball lock pins with zinc L-grip	BOOK 1	416
Ball lock pins with zinc T-grip	BOOK 1	418
Ball lock pins, stainless steel with high shear strength	BOOK 1	398
Ball screw linear actuators rolled, with flange nut DIN 69051 Part 5	BOOK 2	699
Ball screw linear actuators rolled, with screw-in cylinder nut	BOOK 2	700
Ball seats for ball joints DIN 71805	BOOK 2	812
Ball studs DIN 71803 for DIN 71802 angle joints	BOOK 2	813
Ball transfer units for roller rails	BOOK 1	1305
Ball transfer units heavy duty stainless steel	BOOK 2	1220
Ball transfer units heavy duty stainless steel, suitable for outdoor use	BOOK 2	1221
Ball transfer units mini	BOOK 2	1223
Ball transfer units undersprung	BOOK 2	1219
Ball transfer units with fastening holes, without housing	BOOK 2	1221
Ball transfer units with solid steel housing	BOOK 2	1220
Ball transfer units with spring clips	BOOK 2	1222
Ball transfer units with steel housing	BOOK 2	1217
Ball transfer units with steel housing and plastic ball	BOOK 2	1218
Ball transfer units with stud stainless steel	BOOK 2	1224
Ball-end thrust screws with head	BOOK 1	1030-1031
Ball-end thrust screws with head stainless steel	BOOK 1	1032
Ball-end thrust screws without head short version	BOOK 1	1035
Ball-end thrust screws without head stainless steel with flattened ball	BOOK 1	1042
Ball-end thrust screws without head stainless steel with flattened ball and rotation lock	BOOK 1	1043
Ball-end thrust screws without head stainless steel with full ball	BOOK 1	1041

Index

Ball-end thrust screws without head with flattened ball	BOOK 1	1038-1039
Ball-end thrust screws without head with flattened ball and rotation lock	BOOK 1	1040
Ball-end thrust screws without head with flattened ball LONG-LOK secured	BOOK 1	1034
Ball-end thrust screws without head with full ball	BOOK 1	1036-1037
Ball-end thrust screws without head with full ball, LONG-LOK secured	BOOK 1	1033
Ballistol all-purpose oil in food industry quality	BOOK 2	1271
Bar knobs	BOOK 1	897
Barrel locks with return spring aluminium grip to left or right	BOOK 1	288
Barrel locks with return spring stainless steel bevel up or down	BOOK 1	290
Barrel locks with return spring, steel or brass bevel up or down	BOOK 1	287
Barrel slide bolts	BOOK 1	286
Base plate with flanges grey cast iron	BOOK 1	71
Base plate with T-slots grey cast iron	BOOK 1	56
Base plates	BOOK 2	172, 1115
Base plates DIN 6348	BOOK 1	1222
Base plates steel	BOOK 1	59
Baseplates aluminium with tapped holes	BOOK 1	58
Baseplates aluminium with T-slot	BOOK 1	57
Baseplates, grey cast iron with T-slots	BOOK 1	60
Baseplates, grey cast iron, round, with T-slots	BOOK 1	61
Basic modules	BOOK 2	1262
Beam couplings with radial clamping hub, aluminium	BOOK 2	573
Beam couplings with radial clamping hub, stainless steel	BOOK 2	574
Beam couplings with removable clamping hub, aluminium	BOOK 2	575
Beam couplings with removable clamping hub, stainless steel	BOOK 2	576
Bearing flange for feed roller	BOOK 1	1302
Belt tension meter	BOOK 2	389
Bevel gear drive with plastic bevel gears	BOOK 2	526
Bevel gears	BOOK 2	565-566
Bevel gears in steel, ratio 1:1 toothing milled, straight teeth, engagement angle 20°	BOOK 2	529
Bevel gears in steel, ratio 1:2 toothing milled, straight teeth, engagement angle 20°	BOOK 2	530
Bevel gears in steel, ratio 1:3 toothing milled, straight teeth, engagement angle 20°	BOOK 2	531
Bevel gears in steel, ratio 1:4 toothing milled, straight teeth, engagement angle 20°	BOOK 2	532
Bevel gears plastic housing	BOOK 2	564
Bevel gears, plastic, ratio 1:1 injection-moulded, straight teeth, engagement angle 20°	BOOK 2	519
Bevel gears, plastic, ratio 1:1.5 injection moulded, straight teeth, engagement angle 20°	BOOK 2	520
Bevel gears, plastic, ratio 1:2 injection moulded, straight teeth, engagement angle 20°	BOOK 2	521
Bevel gears, plastic, ratio 1:3 injection moulded, straight teeth, engagement angle 20°	BOOK 2	522
Bevel gears, plastic, ratio 1:4 injection-moulded, straight teeth, engagement angle 20°	BOOK 2	523
Bevel gears, plastic, ratio 1:5 injection moulded, straight teeth, engagement angle 20°	BOOK 2	524
Bevel gears, zinc, ratio 1:1 cast, straight teeth, engagement angle 20°	BOOK 2	525
Block hinges with counterbore, long version	BOOK 2	935
Block hinges with fastening nuts	BOOK 2	932-933
Block hinges with fastening nuts, long version	BOOK 2	934
Block machined all sides grey cast iron or aluminium	BOOK 1	71
Bow shackles	BOOK 1	1177
Brush elements, plastic for roller rails	BOOK 1	1305
Bullseye level body	BOOK 2	311
Bullseye level body plastic	BOOK 2	312
Bullseye levels in frame, to screw on	BOOK 2	308
Bullseye levels in plastic frame	BOOK 2	309
Bullseye levels in round frame	BOOK 2	310
Bullseye levels with bead-edged frame	BOOK 2	309
Bushes cylindrical	BOOK 1	235, 344
Bushes tapered	BOOK 1	237, 343
Bushing for ball lock pins	BOOK 1	360
Bushing for ball lock pins with LONG-LOK thread lock	BOOK 1	361
Butt connector sets automatic Type I	BOOK 1	1285
Butt hinges stainless steel	BOOK 2	918
Button head screws EN ISO 7380	BOOK 1	1088-1089
C		**Page**
C profiles steel or stainless steel for glide rails	BOOK 2	485
Cable clips	BOOK 1	1311
Cable clips with T-slot key	BOOK 1	1312
Cable glands	BOOK 2	1157
Cable glands EMC nickel-plated brass	BOOK 2	1162
Cable glands EMC stainless steel	BOOK 2	1163
Cable glands nickel-plated brass	BOOK 2	1159
Cable glands stainless steel	BOOK 2	1160
Cable glands stainless steel or plastic in Hygienic DESIGN	BOOK 2	1161
Cable glands, plastic	BOOK 2	1158
Cable tie block	BOOK 1	1311
Cam action indexing plunger stainless steel, with stop	BOOK 1	279
Cam action indexing plunger with stop	BOOK 1	276-277
Cam clamps adjustable with riser	BOOK 1	521
Cam clamps for eccentric clamp modules	BOOK 1	1318
Cam clamps with end lock	BOOK 1	467
Cam clamps with middle lock	BOOK 1	467
Cam clamps with riser	BOOK 1	517
Cam levers adjustable external thread, stainless steel	BOOK 1	462
Cam levers adjustable external thread, stainless steel, thrust washer stainless steel	BOOK 1	463
Cam levers adjustable external thread, steel or stainless steel	BOOK 1	460
Cam levers adjustable steel, with external thread	BOOK 1	461
Cam levers adjustable with plastic handle external thread, steel or stainless steel	BOOK 1	464
Cam levers double	BOOK 1	466
Cam levers internal and external thread, stainless steel	BOOK 1	454-455
Cam levers internal and external thread, steel or stainless steel	BOOK 1	450-451
Cam levers internal or external thread, stainless steel, thrust washer stainless steel	BOOK 1	456
Cam levers single	BOOK 1	466
Cam levers steel with internal and external thread	BOOK 1	452
Cam levers with plastic handle internal and external thread, steel or stainless steel	BOOK 1	458-459
Cam screws with hexagon washer	BOOK 1	515
Cam screws with hexagon washer, for T-slots	BOOK 1	516
Cam screws with knife edge washer	BOOK 1	515
Cam-action indexing plungers	BOOK 1	275, 284
Cam-action indexing plungers stainless steel	BOOK 1	278, 285, 353
Cap nut compact in Hygienic DESIGN	BOOK 1	1113
Caps for filler necks	BOOK 2	978
Capstan wheel	BOOK 1	759
Cardan shafts telescopic	BOOK 2	631
Carriages	BOOK 2	255
Carriages compact	BOOK 2	257
Carriages compact, short	BOOK 2	258
Carriages DryLin® T	BOOK 2	176
Carriages DryLin® W	BOOK 2	185
Carriages with flange	BOOK 2	256
Carrier keys DIN 2079	BOOK 1	374
Catch plate aluminium for barrel locks with return spring	BOOK 1	289
Catch plates, steel or brass for barrel locks with return spring	BOOK 1	288
Central screws Type B	BOOK 1	1282
Centre jaws	BOOK 2	1122
Centre sleeves spring mounted with retraction cam	BOOK 2	1095

Index

Centring bushes	BOOK 1	308
Centring bushes stainless steel	BOOK 1	309
Centring clamps	BOOK 1	330
Centring clamps round	BOOK 1	328-329
Centring clamps with ball or hexagon segments	BOOK 1	316-319
Centring pins for aligning hole	BOOK 1	294-295
Centring pins for central hole	BOOK 1	294
Centring rings	BOOK 2	81
Centring V	BOOK 1	320
Centring V-plate	BOOK 1	342
Ceramic ball bearings Si3N4	BOOK 2	663
Ceramic ball bearings ZrO2	BOOK 2	662
Ceramic dowel pins similar to DIN 6325	BOOK 1	376
Ceramic dowel pins with female thread similar to DIN 7979	BOOK 1	377
Chain clamp sets, steel	BOOK 1	446
Chain tensioner sets	BOOK 2	478
Chock clamps	BOOK 1	520
Circlips E-type DIN 6799	BOOK 1	1125
Circlips for ball seats DIN 71805	BOOK 2	815
Circlips for bores DIN 472	BOOK 1	1124
Circlips for shafts DIN 471	BOOK 1	1122-1123
Circular plates grey cast iron or aluminium	BOOK 1	80
Circular plates steel	BOOK 1	80
Clamp cam brass	BOOK 1	510
Clamp hubs	BOOK 1	834
Clamp nuts	BOOK 1	572
Clamp nuts with star or T-grip	BOOK 1	573
Clamp plates for toothed belts profile T and AT	BOOK 2	352
Clamp springs	BOOK 1	439
Clamp stops adjustable for slot profiles	BOOK 1	212
Clamp strap assemblies	BOOK 1	438, 442-443
Clamp strap assemblies goose-neck	BOOK 1	439
Clamp strap modules compact	BOOK 1	440
Clamp straps Clamping devices	BOOK 1	421
Clamp straps assorted, long slot	BOOK 1	429
Clamp straps DIN 6314 straight, steel or aluminium	BOOK 1	425
Clamp straps double sided	BOOK 1	436
Clamp straps double-sided, 90° swivelling	BOOK 1	437
Clamp straps gooseneck DIN 6316 wide, steel or aluminium	BOOK 1	428
Clamp straps gooseneck narrow, steel	BOOK 1	427
Clamp straps hinge heel	BOOK 1	435
Clamp straps hinge heel with bolt slot	BOOK 1	445
Clamp straps mini double sided	BOOK 1	435
Clamp straps open U DIN 6315 C, round pin, steel or aluminium	BOOK 1	434
Clamp straps open U DIN 6315, steel or aluminium	BOOK 1	430
Clamp straps open U flat pin, steel or aluminium	BOOK 1	431
Clamp straps open-U with pin and protective insert	BOOK 1	432
Clamp straps pivot steel	BOOK 1	445
Clamp straps pivot strap only or assembly	BOOK 1	433
Clamp straps slotted heel	BOOK 1	422
Clamp straps stepped-heel, steel or aluminium	BOOK 1	424
Clamp straps swivel-heel	BOOK 1	423
Clamp straps tapped-heel	BOOK 1	423
Clamp straps with flattened ball	BOOK 1	426
Clamping angles Type I	BOOK 1	1292
Clamping arm for swing clamp	BOOK 1	661
Clamping bolts	BOOK 1	490
Clamping cams	BOOK 1	512
Clamping claw sets	BOOK 2	1129
Clamping element “actima”	BOOK 1	500-501
Clamping element “arness”	BOOK 1	508-509
Clamping element for rotary stage plain bearing	BOOK 2	191
Clamping elements	BOOK 2	479
Clamping elements for miniature profile guide rails	BOOK 2	264
Clamping elements for profile guide rails	BOOK 2	262
Clamping elements for round guides	BOOK 2	301
Clamping elements stainless steel	BOOK 2	480
Clamping elements with front fastening	BOOK 2	481
Clamping force intensifiers	BOOK 1	1131
Clamping jaws for floating clamps	BOOK 1	506
Clamping joints	BOOK 1	923
Clamping joints	BOOK 2	1056
Clamping joints individually adjustable	BOOK 1	924
Clamping levers	BOOK 1	847
Clamping levers antistatic external thread, plastic grip	BOOK 1	910
Clamping levers antistatic internal thread, plastic grip	BOOK 1	900
Clamping levers external thread	BOOK 1	848, 852, 873
Clamping levers external thread, stainless steel	BOOK 1	853
Clamping levers external thread, steel	BOOK 1	855
Clamping levers external thread, steel parts stainless steel	BOOK 1	849, 878
Clamping levers flat external thread	BOOK 1	871
Clamping levers flat external thread, steel parts stainless steel	BOOK 1	872
Clamping levers flat internal thread	BOOK 1	856
Clamping levers flat internal thread, steel parts stainless steel	BOOK 1	857
Clamping levers internal thread	BOOK 1	845, 858
Clamping levers internal thread, stainless steel	BOOK 1	851
Clamping levers internal thread, steel	BOOK 1	850, 854
Clamping levers internal thread, steel parts stainless steel	BOOK 1	846, 864
Clamping levers with external thread, stainless steel	BOOK 1	882
Clamping levers with internal thread, stainless steel	BOOK 1	868
Clamping levers with plastic handle external thread	BOOK 1	908
Clamping levers with plastic handle external thread, metal parts stainless steel	BOOK 1	914
Clamping levers with plastic handle internal thread	BOOK 1	898
Clamping levers with plastic handle internal thread, metal parts stainless steel	BOOK 1	904
Clamping levers with protective cap external thread	BOOK 1	874
Clamping levers with protective cap internal thread	BOOK 1	859
Clamping levers with protective cap internal thread, steel parts stainless steel	BOOK 1	865
Clamping levers with protective cap with external thread, metal parts stainless steel	BOOK 1	879
Clamping levers with protective cap with external thread, stainless steel	BOOK 1	883
Clamping levers with protective cap with internal thread, stainless steel	BOOK 1	869
Clamping levers with push button external thread, metal parts stainless steel	BOOK 1	915
Clamping levers with push button internal thread	BOOK 1	899
Clamping levers with push button internal thread, metal parts stainless steel	BOOK 1	905
Clamping levers with push button with external thread	BOOK 1	909
Clamping levers with thrust pad	BOOK 1	918-919
Clamping levers, plastic with external thread, steel parts trivalent blue passivated	BOOK 1	911
Clamping levers, plastic with female thread and clamping force intensifier	BOOK 1	902-903, 906-907
Clamping levers, plastic with internal thread, steel parts trivalent blue passivated	BOOK 1	901
Clamping levers, plastic with male thread and clamping force intensifier	BOOK 1	912-913, 916-917
Clamping levers, plastic with safety function with female thread	BOOK 1	920
Clamping levers, plastic with safety function with male thread	BOOK 1	921
Clamping levers, zinc with external thread, steel parts trivalent blue passivated	BOOK 1	875
Clamping levers, zinc with female thread and clamping force intensifier	BOOK 1	862-863, 866-867

Index

Clamping levers, zinc with internal thread, steel parts trivalent blue passivated	BOOK 1	860
Clamping levers, zinc with male thread and clamping force intensifier	BOOK 1	876-877, 880-881
Clamping pin, steel	BOOK 1	575
Clamping pin, steel or stainless steel with adapter plate	BOOK 1	578
Clamping pin, steel or stainless steel with clamping angle	BOOK 1	577
Clamping pin, steel or stainless steel with washer	BOOK 1	576
Clamping pins	BOOK 1	491
Clamping pins (high force)	BOOK 1	491
Clamping screws	BOOK 1	492
Clamping screws (high force)	BOOK 1	492-493
Clevis joints DIN 71752	BOOK 2	797
Clevis joints for rod ends	BOOK 2	788
Clevis joints for rod ends stainless steel	BOOK 2	789
Clevis joints Rod ends Ball joints Axial joints Levelling sets Swivel feet Levelling feet Tube-end plugs Equipment feet Hinges	BOOK 2	787
Clevis joints stainless steel DIN 71752	BOOK 2	796
Clevis joints with snap-in pin DIN 71752	BOOK 2	791
Clevis tang, steel	BOOK 2	799
Clevis with external thread	BOOK 1	1152
Clevis, steel or stainless steel with male thread	BOOK 2	798
Clip-in bins, antistatic plastic for mounting profiles	BOOK 1	1324
Clip-in bins, plastic for type I and type B profile slots and mounting profiles	BOOK 1	1322-1323
Clip-in shell bins, antistatic plastic for profile slots type I and type B and mounting profiles	BOOK 1	1321
Clip-in shell bins, plastic for profile slots type I and type B and mounting profiles	BOOK 1	1320
Collet for external clamping	BOOK 1	332-333
Collet for internal clamping	BOOK 1	334-335
Column bases double	BOOK 2	1043
Column bases single	BOOK 2	1042
Column clamps double	BOOK 2	1044
Column shaft collars	BOOK 2	1046
Columns for spring fingers	BOOK 2	1108
Compact clamps	BOOK 1	564
Compression latches	BOOK 1	640
Compression latches with adjustable tongue height	BOOK 1	641
Compression springs Elastomer buffers Rubber buffers Shock absorbers Gas springs	BOOK 2	735
Compression springs ISO 10243, heavy load	BOOK 2	742-743
Compression springs ISO 10243, light load	BOOK 2	738-739
Compression springs ISO 10243, moderate load	BOOK 2	740-741
Compression springs ISO 10243, very heavy load	BOOK 2	744-745
Concentricity gauges Dial gauges	BOOK 2	1057
Concentricity gauges max. Ø 35 mm	BOOK 2	1060
Concentricity gauges max. Ø 80 mm	BOOK 2	1061
Conical grip revolving	BOOK 1	816
Conical grips revolving	BOOK 1	818
Conical knobs	BOOK 1	774
Conical spring washers DIN 6796	BOOK 1	1115
Connecting element, plastic for energy chains, inner height 12 mm	BOOK 2	1136
Connecting elements, plastic for energy chains, inner height 17 mm	BOOK 2	1138
Connecting elements, plastic for energy chains, inner height 25 mm	BOOK 2	1141
Connecting elements, plastic for energy chains, inner height 35 mm	BOOK 2	1144
Connecting elements, plastic for energy chains, inner height 45 mm	BOOK 2	1147
Connecting links duplex DIN ISO 606	BOOK 2	397
Connecting links duplex, stainless steel DIN ISO 606	BOOK 2	401
Connecting links grade 10	BOOK 1	1199
Connecting links triplex DIN ISO 606	BOOK 2	398
Connecting sets automatic Type B	BOOK 1	1279
Connecting sets automatic Type I	BOOK 1	1278
Connecting sets central Type B	BOOK 1	1276-1277
Connecting sets central Type I	BOOK 1	1275
Connecting sets standard Type I	BOOK 1	1273
Connecting sets universal Type I	BOOK 1	1274
Connectors Energy chains	BOOK 2	1131
Connectors self-assembly with screw fitting	BOOK 2	1132
Connectors with screw fitting	BOOK 2	1133-1134
Controls for lifting columns	BOOK 2	1178
Coolant hose LOC-LINE® Flexi	BOOK 2	1228-1231
Couplings for cross-clamping	BOOK 2	1127
Couplings Rigid couplings Keyless locking couplings Cardan joints Quick-fit couplings Bearings Seals	BOOK 2	569
Cover and adapter profiles Type B and Type I	BOOK 1	1297
Cover profiles Type I	BOOK 1	1298
Crank handles aluminium	BOOK 1	889
Crank handles aluminium cylindrical revolving grip	BOOK 1	893
Crank handles aluminium with fold-away cylinder grip	BOOK 1	894
Crank handles aluminium with safety cylinder grip	BOOK 1	895
Crank handles balanced	BOOK 1	897
Crank handles offset similar to DIN 468	BOOK 1	887
Crank handles stainless steel cylindrical revolving grip	BOOK 1	896
Crank handles straight similar to DIN 469	BOOK 1	888
Crank handles with fold-away grip	BOOK 1	890
Crank handles with revolving grip	BOOK 1	891
Crank handles with safety grip	BOOK 1	892
Cross slides, long with electronic position indicator	BOOK 2	159
Cross slides, short with electronic position indicator	BOOK 2	154-155
Cross stages, long	BOOK 2	156
Cross stages, long with position indicators	BOOK 2	158
Cross stages, short	BOOK 2	152
Cross stages, short with position indicators	BOOK 2	153
Cube connector sets Type B	BOOK 1	1281
Cup elements type H2	BOOK 2	835
Cup holder plastic for aluminium profiles, closed or open	BOOK 1	1327
Cup holder plastic, antistatic for aluminium profiles, closed	BOOK 1	1328
C-washers captive DIN 6371	BOOK 1	1134
C-washers DIN 6372 enhanced	BOOK 1	1130
Cylinder clamping sets	BOOK 2	1125
Cylinder roller bearing FAG with cage	BOOK 2	671
Cylindrical grips fold-down	BOOK 1	822
Cylindrical grips revolving	BOOK 1	821
Cylindrical grips revolving stainless steel	BOOK 1	818
Cylindrical grips revolving with hexagon socket	BOOK 1	821
Cylindrical grips, plastic fold-down	BOOK 1	824
Cylindrical grips, plastic revolving	BOOK 1	823
Cylindrical pins DIN 6325	BOOK 1	376
Cylindrical pins with internal thread DIN EN ISO 8735	BOOK 1	377
D		**Page**
Damping plates	BOOK 2	768
Deep groove ball bearing FAG single row	BOOK 2	658-660
Deep groove ball bearings stainless steel, DIN 626	BOOK 2	661
Deflection dial gauge holders 180° probe lever with hole	BOOK 2	1085
Deflection dial gauge holders 180° probe lever with thread	BOOK 2	1086
Deflection dial gauge holders 90°	BOOK 2	1084
Deflection dial gauge holders 90° probe lever with hole	BOOK 2	1085
Deflection dial gauge holders 90° probe lever with thread	BOOK 2	1084, 1086
Dial gauge arms	BOOK 2	1053
Dial gauge collets for Ø8 shafts	BOOK 2	1068
Dial gauge holders	BOOK 2	1054
Dial gauge holders for measuring frame	BOOK 2	1071
Dial gauge holders long version with thread	BOOK 2	1070
Dial gauge holders short version with smooth shaft	BOOK 2	1070
Dial gauge holders short version with thread	BOOK 2	1069
Dial gauge holders sliding	BOOK 2	1069

Index

Dial gauge holders with fine adjustment	BOOK 2	1054
Dial gauges digital	BOOK 2	1066
Dial gauges DIN 878	BOOK 2	1065
DIN 1283 grease guns	BOOK 2	1288
Dipsticks	BOOK 2	985
Disc grips for hexagon socket screws	BOOK 1	724
Disc springs DIN EN 16983	BOOK 1	1128
Door latch	BOOK 1	468
Door stops plastic for aluminium profile with buffer or with magnetic catch	BOOK 1	208
Double ball catches	BOOK 1	203
Double tube linear actuator	BOOK 2	192-193
Double tube linear actuator with mounting bracket	BOOK 2	194
Dovetail slides	BOOK 2	99
Dovetail slides with end plates	BOOK 2	100
Dovetail slides with end plates and location holes	BOOK 2	114-115
Dovetail slides with location holes	BOOK 2	112-113
Dovetail slides with micrometer spindle	BOOK 2	92-93, 101
Dovetail slides with micrometer spindle and handwheel	BOOK 2	102
Dovetail slides with micrometer spindle and location holes	BOOK 2	96-97, 116-117
Down-thrust clamps	BOOK 1	561
Draw bolts for pneumatic pull clamps	BOOK 1	498
Drill bush clamps DIN 173-1	BOOK 1	1228
Drill bushes cylindrical DIN 179	BOOK 1	1224
Drill bushes flanged DIN 172	BOOK 1	1225
Drill bushes push-in DIN 173	BOOK 1	1226
Drill bushes push-in DIN 173-1	BOOK 1	1227
Drilling plates DIN 6348 enhanced	BOOK 1	1221
Drive technology	BOOK 2	333
D-shackles	BOOK 1	1178
Ducks feet	BOOK 2	879
Dust caps	BOOK 1	645
E		**Page**
Earthing terminal Type I	BOOK 1	1314
Eccentric bushes and assembly tools for lateral spring plungers	BOOK 1	382
Eccentric bushes with centre bore	BOOK 1	383
Eccentric clamp modules	BOOK 1	1316-1318
Eccentric stops	BOOK 1	211
Eccentric supports	BOOK 1	160
Edge protection profiles with integrated steel wire core	BOOK 2	1247
Edge protection profiles with steel retaining strip	BOOK 2	1246
Elastic slot keys Pat. No. 4200676	BOOK 1	369
Elastomer buffers Shore 70A	BOOK 2	746
Elastomer buffers Shore 80A	BOOK 2	747
Elastomer buffers Shore 90A	BOOK 2	748
Elastomer dog couplings clamping with grub screw	BOOK 2	579
Elastomer dog couplings with conical hub and clamping ring (similar to DIN 69002)	BOOK 2	577
Elastomer dog couplings with radial clamping hub	BOOK 2	578
Elevating castors with foot with bolt hole or mounting plate	BOOK 2	1214
Elevating castors with integrated machine foot	BOOK 2	1215
Emergency openers	BOOK 1	659
End caps Type B and Type I	BOOK 1	1296
End plates, steel for roller rails	BOOK 1	1308
End seals double-lip sealing rings	BOOK 2	289
Energy chains, plastic inner height 12 mm, closed	BOOK 2	1135
Energy chains, plastic inner height 17 mm, openable along inner radius	BOOK 2	1137
Energy chains, plastic inner height 25 mm, openable along inner radius	BOOK 2	1140
Energy chains, plastic inner height 35 mm, o penable along inner radius	BOOK 2	1143
Energy chains, plastic inner height 45 mm, openable from both sides	BOOK 2	1146
Extension columns long	BOOK 1	1223
Extension columns short	BOOK 1	1223
Extension for probe inserts	BOOK 2	1075
Extension nuts height 3xD	BOOK 1	1105
Extension pieces	BOOK 1	126-127
Extension shafts	BOOK 2	1126
Extensions for probe inserts	BOOK 2	1079
Extractor	BOOK 1	378
Eye bolts DIN 444, Form B	BOOK 1	1093
Eye bolts DIN 444, Form B with long thread	BOOK 1	1094-1095
F		**Page**
Face pin spanner adjustable, cranked	BOOK 2	1253
Fasteners Ball-end thrust screws Thrust screws and thrust pads Grippers Torque bolts Threaded inserts Lifting bolts Swivel bales Ring bolts	BOOK 1	1013
Fastening screws for cross table mounting	BOOK 2	95
Fastening sets for straps und angles	BOOK 1	1287
Feeler gauge strips	BOOK 2	1235
Feet with threaded pin, DIN 6320 (Edition 1971)	BOOK 1	126
Filler necks	BOOK 2	986-988
Five lobe grips	BOOK 1	775, 945, 949
Five lobe grips plastic lockable	BOOK 1	948
Five lobe grips with external thread	BOOK 1	947
Five lobe grips with internal thread	BOOK 1	946
Fixed bearing units	BOOK 2	702
Fixed bearing units block version	BOOK 2	704-705, 707
Fixed bearing units flange version	BOOK 2	709
Fixed centres	BOOK 2	1096
Fixed jaws for robust side clamps	BOOK 1	533
Fixture clamps machinable	BOOK 1	511
Fixture clamps unequal hexagon	BOOK 1	513
Fixture feet with external thread	BOOK 1	134
Fixture feet with internal thread	BOOK 1	135
Flat clamp, steel for T-slot	BOOK 1	556
Flat clamps	BOOK 1	555
Flat guides DryLin® N	BOOK 2	184
Flip-Flop hoist rings	BOOK 1	1185
Floating bearing units	BOOK 2	703
Floating bearing units block version	BOOK 2	706, 708
Floating bearing units flange version	BOOK 2	710
Floating clamp	BOOK 1	502-503
Floating clamp with separate workpiece clamp and interlock	BOOK 1	504-505
Floor version on rollers	BOOK 2	1256-1257
Foot plates Type B and Type I	BOOK 1	1300-1301
Four-spoked nuts	BOOK 1	758
Free-standing counter version	BOOK 2	1258
Free-standing floor version	BOOK 2	1255
Front mounted counter version	BOOK 2	1260
G		**Page**
Gas springs	BOOK 2	774-775
Gas springs stainless steel	BOOK 2	776-777
Gauge holders articulated arm with central hydraulic lock	BOOK 2	1051
Gauge stands magnetic	BOOK 2	1052
Gear racks in steel toothing milled, straight teeth, engagement angle 20°	BOOK 2	527-528
Gear racks, plastic injection moulded, straight teeth, engagement angle 20°	BOOK 2	518
Glide rails PE-UHMW for roller chains DIN ISO 606	BOOK 2	483
Glide rails PE-UHMW for roller chains DIN ISO 606 for C profiles	BOOK 2	484
Grease gun mouthpieces, steel	BOOK 2	1291
Grease guns, one-hand operation, similar to DIN 1283	BOOK 2	1289
Grease guns, two-hand operation	BOOK 2	1290
Grease nipple assortment box, steel	BOOK 2	1277

Index

Grease nipple caps for conical grease nipples	BOOK 2	1274
Grease nipples button head DIN 3404	BOOK 2	1276
Grease nipples conical head DIN 71412	BOOK 2	1272-1273
Grease nipples flush type, DIN 3405	BOOK 2	1275
Grip module parallel grippers	BOOK 2	74-75
Grip nuts	BOOK 1	940
Grip screws	BOOK 1	941
Gripper pads round carbide	BOOK 1	1044
Gripper pads square carbide	BOOK 1	1051
Grippers adjustable	BOOK 1	1052
Grippers and inserts round	BOOK 1	1046-1047
Grippers and inserts round with counterbore	BOOK 1	1048
Grippers hexagonal	BOOK 1	1049
Grippers square	BOOK 1	1050
Grub screw with hexagon socket and pointed end DIN 914 / DIN EN ISO 4027	BOOK 1	1077
Grub screws DIN 551	BOOK 1	1152
Grub screws with ball thrust point	BOOK 1	1056
Grub screws with flat point hexagon socket DIN 913	BOOK 1	1076
Grub screws with thrust point DIN 6332	BOOK 1	1056
Guide bushes bronze, maintenance-free	BOOK 2	642
Guide bushes DIN 9834 / ISO 9448, bronze, maintenance-free with collar	BOOK 2	643
Guide bushes, ceramic	BOOK 2	640
Guide rails DryLin® T	BOOK 2	177
Guide rails DryLin® W double	BOOK 2	188
Guide rails DryLin® W single	BOOK 2	187
Guide rails for cross rollers	BOOK 2	107
Guide rails Teflon-coated	BOOK 2	110-111
Guide rollers	BOOK 2	1209
H		**Page**
Hammer inserts for Supercraft hammers	BOOK 2	1248
Hammer-head screws	BOOK 1	1029
Hand switch for lifting columns	BOOK 2	1179
Hand wheels, steel, stamped	BOOK 1	809
Handles	BOOK 1	833
Handles screw-in	BOOK 1	832
Handles screw-in with torque limit	BOOK 1	832
Handwheel washers	BOOK 1	1129
Handwheels	BOOK 1	779, 944
Handwheels 2-spoke aluminium, flat wheel rim	BOOK 1	802-803
Handwheels 2-spoke flat rim, aluminium	BOOK 1	804-805
Handwheels 2-spoke plastic	BOOK 1	776
Handwheels 2-spoke plastic, with folding grip	BOOK 1	778
Handwheels 2-spoke plastic, with revolving grip	BOOK 1	777
Handwheels DIN 950, aluminium	BOOK 1	792-793
Handwheels DIN 950, grey cast iron	BOOK 1	790-791
Handwheels DIN 950, stainless steel	BOOK 1	794
Handwheels disc aluminium	BOOK 1	796-799
Handwheels disc similar to DIN 950, aluminium	BOOK 1	806
Handwheels disc stainless steel with revolving grip	BOOK 1	800
Handwheels disc with revolving grip	BOOK 1	807
Handwheels disc without grip	BOOK 1	808
Handwheels for position indicators	BOOK 2	331
Handwheels with fold-away grip	BOOK 1	781
Handwheels with revolving grip	BOOK 1	780
Handwheels with safety grip	BOOK 1	782-783
HeliCoil®plus threaded inserts	BOOK 1	1157
Hexagon bolts with narrow shaft in Hygienic DESIGN	BOOK 1	1080-1081
Hexagon domed cap nuts similar to DIN 1587	BOOK 1	1112
Hexagon head bolts DIN 931/DIN EN ISO 4014/DIN EN 24014	BOOK 1	1078-1079
Hexagon head bolts DIN 933	BOOK 1	1084-1085
Hexagon head bolts with flange EN 1665	BOOK 1	1086
Hexagon head bolts with serrated flange	BOOK 1	1087
Hexagon head screws, stainless steel in Hygienic DESIGN	BOOK 1	1082
Hexagon nut with serrated flange	BOOK 1	1103
Hexagon nuts DIN 934/DIN EN ISO 4032/DIN EN 24032	BOOK 1	1098
Hexagon nuts for cable glands	BOOK 2	1164
Hexagon nuts for EMC cable glands	BOOK 2	1165
Hexagon nuts height 1.5xD, DIN 6330 enhanced	BOOK 1	1110
Hexagon nuts thin type DIN 439	BOOK 1	1099
Hexagon nuts with collar height 1.5xD, DIN 6331 enhanced	BOOK 1	1108
Hexagon nuts with flange	BOOK 1	1105
Hexagon nuts with flange EN 1661	BOOK 1	1104
Hexagon nuts with no-loss washer	BOOK 1	1109
Hexagon nuts with polyamide thread lock high type, DIN 982 / stainless steel similar to DIN 982	BOOK 1	1100
Hexagon nuts with polyamide thread lock thin type, DIN 985	BOOK 1	1101
Hexagon nuts with spherical seat	BOOK 1	1111
Hexagon nuts with thread lock DIN 980	BOOK 1	1102
High pressure nozzles LOC-LINE®	BOOK 2	1234
Hinge blocks long	BOOK 1	1218
Hinge blocks short	BOOK 1	1218
Hinge pins	BOOK 1	465
Hinge plates	BOOK 2	790
Hinges aluminium	BOOK 2	908
Hinges aluminium, lift-off, left	BOOK 2	905
Hinges aluminium, lift-off, right	BOOK 2	906
Hinges aluminium, with adjustable friction	BOOK 2	898-899
Hinges aluminium, with detent	BOOK 2	901-902
Hinges die-cast zinc, with elongated holes	BOOK 2	903
Hinges die-cast zinc, with locking lever	BOOK 2	904
Hinges lift-off stainless steel	BOOK 2	907, 911
Hinges plastic	BOOK 2	890-891
Hinges plastic with bush and fastening screws	BOOK 2	926
Hinges plastic with bushes	BOOK 2	924
Hinges plastic with fastening holes	BOOK 2	894
Hinges plastic with fastening screws	BOOK 2	925
Hinges plastic, detent	BOOK 2	896
Hinges plastic, lift-off, left	BOOK 2	886-887
Hinges plastic, lift-off, right	BOOK 2	888-889
Hinges plastic, lift-off, with guide tabs	BOOK 2	895
Hinges plastic, with adjustable friction	BOOK 2	897
Hinges plastic, with elongated holes	BOOK 2	893
Hinges plastic, with locking lever	BOOK 2	892
Hinges sheet steel or sheet stainless steel	BOOK 2	917
Hinges stainless steel 912-913, 915	BOOK 2	909-910,
Hinges steel internal, opening angle 110°	BOOK 2	922
Hinges steel or stainless steel internal, opening angle 125°	BOOK 2	921
Hinges steel or stainless steel internal, opening angle 90°	BOOK 2	920
Hinges steel, maintenance-free	BOOK 2	936
Hinges weldable	BOOK 2	927, 931
Hinges weldable, stainless steel	BOOK 2	928-929
Hinges, stainless steel	BOOK 2	919
Hinges, stainless steel with preset friction	BOOK 2	900
Hinges, steel, in-frame opening angle 110°	BOOK 2	923
Hoist rings 1186	BOOK 1	1181, 1184,
Hoist rings 360° rotation grade 10	BOOK 1	1180
Hoist rings with Envirolox® coating	BOOK 1	1182
Hold-down clamps pneumatic	BOOK 1	562-563
Hollow shaft sensors with magnetic scanning	BOOK 2	306
Hook clamp holders	BOOK 1	486, 488
Hook clamp with long clamp strap	BOOK 1	476
Hook clamps 482-483	BOOK 1	475,
Hook clamps precision	BOOK 1	489
Hook clamps with collar	BOOK 1	478, 484
Hook clamps with collar and cam lever	BOOK 1	479-480
Hook clamps with mounting bracket	BOOK 1	485
Hook clamps with protective insert	BOOK 1	477

Index

Hook wrench with lug DIN 1810A enhanced	BOOK 2	1252
Housings for flange nuts	BOOK 2	701
H-profiles grey cast iron or aluminium	BOOK 1	83
HYGIENEshield Premium	BOOK 2	1264

I		Page
Idler sprockets with ball bearing	BOOK 2	474
igubal® pillow block bearings	BOOK 2	639
Indexing and clamping grip	BOOK 1	348-349
Indexing and clamping grip with optical locked indicator	BOOK 1	350-351
Indexing plunger with five lobe grip	BOOK 1	346
Indexing plunger with lock	BOOK 1	240
Indexing plunger, stainless steel with remote actuation	BOOK 1	268-269
Indexing plungers	BOOK 1	218-221,
242-243, 249-253		
Indexing plungers - Precision with cylindrical pin	BOOK 1	344
Indexing plungers - Precision with tapered pin	BOOK 1	343
Indexing plungers - Premium with cylindrical pin	BOOK 1	234-235
Indexing plungers - Premium with tapered pin	BOOK 1	236
Indexing plungers ECO	BOOK 1	239
Indexing plungers ECO short version	BOOK 1	248
Indexing plungers for thin-walled parts	BOOK 1	233
Indexing plungers short version	BOOK 1	226-229
Indexing plungers short version, with thread lock	BOOK 1	230-231
Indexing plungers stainless steel	BOOK 1	232
Indexing plungers stainless steel without collar	BOOK 1	258-259
Indexing plungers with extended indexing pin	BOOK 1	224-225
Indexing plungers with locked mark	BOOK 1	244
Indexing plungers with rotation lock and lead-in chamfer	BOOK 1	241
Indexing plungers with T-grip	BOOK 1	246-247
Indexing plungers with thread lock	BOOK 1	222-223
Indexing plungers without collar	BOOK 1	254-255,
260-261, 264-267, 270-274		
Indexing plungers without collar, extended indexing pin	BOOK 1	256-257
Indexing plungers, pneumatic	BOOK 1	262
Inductive proximity switches rectangular housing	BOOK 2	1155
Inductive proximity switches round housing	BOOK 2	1154
Inductive proximity switches threaded housing	BOOK 2	1156
Industrial shock absorbers adjustable	BOOK 2	778
Industrial shock absorbers adjustable, stainless steel	BOOK 2	779
In-line hinges stainless steel lift-off, screw-on	BOOK 2	930
Insert bearing B	BOOK 2	722
Insert bearing MUC stainless steel	BOOK 2	730
Insert bearing UC	BOOK 2	721
Inserts	BOOK 1	158
Inspection blocks with column	BOOK 2	1050
Inspection tables	BOOK 2	1050
Inspection tables Gauge stands Gauge joints	BOOK 2	1049
Interchangeable subplates, grey cast iron with grid holes	BOOK 1	63
Interchangeable subplates, grey cast iron,		
with pre-machined clamping faces	BOOK 1	62
Intermediate plates	BOOK 2	327

J		Page
Jack screws	BOOK 1	143, 158
Jack screws extended	BOOK 1	159
Jaw pins	BOOK 2	1124
Jaw plates machinable	BOOK 2	1118
Jaw plates smooth	BOOK 2	1117
Jaw plates smooth for centre jaws	BOOK 2	1123
Jaw plates smooth for pendulum jaws	BOOK 2	1120
Jaw plates with pins	BOOK 2	1117
Jaw plates with pins for centre jaws	BOOK 2	1123
Jaw plates with pins for pendulum jaws	BOOK 2	1121
Jig elements Drill bushes	BOOK 1	1217
Joint angles Type I	BOOK 1	1293
Joint blocks	BOOK 2	1055-1056
Joints Type B and Type I	BOOK 1	1294-1295

K		Page
Key rings	BOOK 1	364
Keyless locking couplings Form A for thin walled hubs	BOOK 2	590-591
Keyless locking couplings Form A stainless steel	BOOK 2	592
Keyless locking couplings Form B	BOOK 2	594-595
Keyless locking couplings Form C with axial ring	BOOK 2	596-597
Keyless locking couplings Form D compact design	BOOK 2	598-599
Keyless locking couplings Form E short version	BOOK 2	602-603
Keyless locking couplings Form F short version with axial ring	BOOK 2	604-605
Keyless locking couplings Form G increased tolerance range	BOOK 2	606-607
Keyless locking couplings Form G stainless steel	BOOK 2	608
Keyless locking couplings Form H for high torques	BOOK 2	610-611
Keyless locking couplings with central nut	BOOK 2	612-613
Keyless locking couplings, Form D stainless steel	BOOK 2	600
Keys for quarter-turn locks	BOOK 1	646
Klüber “Quietsch-Ex”	BOOK 2	1266
Klüber bonded coating UNIMOLY C 220	BOOK 2	1270
Klüber copper paste lead-free	BOOK 2	1267
Klüber lubricating paste	BOOK 2	1266
Klüber molybdenum disulphide lubricant	BOOK 2	1268, 1270
Klüber safety lubricating grease	BOOK 2	1267
Knobs flat	BOOK 1	760
Knurled heads for hexagon socket screws	BOOK 1	723
Knurled knobs	BOOK 1	713, 715,
717-718, 784-785		
Knurled knobs aluminium	BOOK 1	716
Knurled knobs antistatic	BOOK 1	714
Knurled knobs for screws with hex head	BOOK 1	722
Knurled knobs metal parts stainless steel	BOOK 1	786-787
Knurled knobs with arrow	BOOK 1	719
Knurled knobs with grip	BOOK 1	788
Knurled nuts	BOOK 1	709
Knurled nuts flat steel and stainless steel, DIN 467	BOOK 1	720
Knurled nuts high steel and stainless steel, DIN 466	BOOK 1	720
Knurled nuts plastic	BOOK 1	705-706
Knurled nuts plastic, antistatic	BOOK 1	707
Knurled nuts quick-acting	BOOK 1	708
Knurled nuts steel and stainless steel, DIN 6303	BOOK 1	704
Knurled screws	BOOK 1	721
Knurled screws high form steel and stainless steel, DIN 464	BOOK 1	710
Knurled screws low head steel and stainless steel, DIN 653	BOOK 1	709
Knurled screws plastic	BOOK 1	711
Knurled screws plastic, antistatic	BOOK 1	712
Knurled thumb screws plastic	BOOK 1	710
Knurled torque knobs	BOOK 1	1060

L		Page
L profile with reinforcing ribs grey cast iron	BOOK 1	82
Latch	BOOK 1	1219
Latch stainless steel DIN 3133	BOOK 1	614
Latches adjustable	BOOK 1	619
Latches adjustable with swing bail	BOOK 1	618
Latches with draw bail	BOOK 1	615-616
Latches with release stainless steel	BOOK 1	617
Latches with spring clip	BOOK 1	613
Lateral spring plungers	BOOK 1	380-381,
391		
Lateral spring plungers with threaded sleeve	BOOK 1	386-387
Lateral spring plungers with threaded sleeve,		
without thrust pin	BOOK 1	388
Lateral spring plungers without thrust pin	BOOK 1	384
Ledge handles	BOOK 1	1001
Ledge handles stainless steel	BOOK 1	1000
Levelling feet	BOOK 2	852, 883
Levelling feet caps	BOOK 2	853
Levelling feet ECO threaded spindles steel or stainless steel	BOOK 2	878
Levelling feet for aluminium profiles	BOOK 2	882

Index

Levelling feet in Hygienic DESIGN	BOOK 2	844-845
Levelling feet plates die-cast zinc or stainless steel	BOOK 2	872-873
Levelling feet plates ECO die-cast zinc, stainless steel or plastic	BOOK 2	877
Levelling feet plates extended die-cast zinc	BOOK 2	874
Levelling feet plates plastic	BOOK 2	869
Levelling feet plates plastic, heavy-duty version	BOOK 2	870
Levelling feet round	BOOK 2	848
Levelling feet round with hex. collar	BOOK 2	849
Levelling feet steel or stainless steel	BOOK 2	841-843
Levelling feet threaded spindles steel or stainless steel	BOOK 2	875
Levelling feet with hex. base	BOOK 2	850
Levelling feet with knurled base	BOOK 2	851
Levelling sets high version	BOOK 2	820
Levelling sets low version	BOOK 2	822
Levelling sets low version with locknut	BOOK 2	823
Levelling sets spherical washer	BOOK 2	824, 826
Levelling sets spherical washer with locknut	BOOK 2	825, 827
Levelling sets with locknut	BOOK 2	821
Levelling wedges with adhesive anchor	BOOK 2	830
Levelling wedges, aluminium with adhesive anchor	BOOK 2	832
Levelling wedges, aluminium with non-slip insulating layer, free-standing	BOOK 2	833
Levelling wedges, steel free-standing	BOOK 2	828, 831
Levelling wedges, steel with non-slip insulating layer, free-standing	BOOK 2	829
Levers 20° DIN 99	BOOK 1	826
Lifting columns aluminium electrically adjustable	BOOK 2	1177
Lifting pins self-locking	BOOK 1	1188
Lifting pins self-locking, stainless steel	BOOK 1	1189, 1192
Lifting rings	BOOK 1	1182
Lifting slings	BOOK 1	1203
Lifting units pneumatic with rail guide	BOOK 2	60-61
Lifting units pneumatic with round guides	BOOK 2	62-65
Line laser	BOOK 2	390
Linear actuator connector clamps base	BOOK 2	1032
Linear actuator connector clamps cross	BOOK 2	1027, 1029
Linear actuator connector clamps flange	BOOK 2	1030
Linear actuator connector clamps, stainless steel base	BOOK 2	1033
Linear actuator connector clamps, stainless steel cross	BOOK 2	1028
Linear actuator connector clamps, stainless steel flange	BOOK 2	1031
Linear actuators	BOOK 2	1025
Linear actuators with toothed belt drive and profile rail guide	BOOK 2	82-83
Linear actuators, stainless steel	BOOK 2	1026
Linear ball bearing with internal race	BOOK 2	200-201
Linear ball bearing with square flange	BOOK 2	275
Linear ball bearing with square flange, double bearing	BOOK 2	277
Linear ball bearing, plastic, compact, self-aligning	BOOK 2	271
Linear ball bearing, steel, compact	BOOK 2	272
Linear ball bearings self-aligning	BOOK 2	269
Linear ball bearings self-aligning, high load rating	BOOK 2	273
Linear ball bearings stainless steel	BOOK 2	268
Linear ball bearings with plastic cage	BOOK 2	266
Linear ball bearings with round flange	BOOK 2	274
Linear ball bearings with round flange, double bearing	BOOK 2	276
Linear ball bearings with steel cage	BOOK 2	267
Linear gantry module with rail guides	BOOK 2	78-79
Linear gantry module with round guides	BOOK 2	80-81
Linear housing units quadro, closed	BOOK 2	287
Linear housing units quadro, open	BOOK 2	288
Linear housing units single, closed	BOOK 2	280
Linear housing units single, open	BOOK 2	282
Linear housing units tandem, closed	BOOK 2	284
Linear housing units tandem, open	BOOK 2	286
Linear housing units with flange	BOOK 2	278
Linear housing units with flange, tandem	BOOK 2	279
Linear housing units, aluminium, compact, single, closed	BOOK 2	280-281
Linear housing units, aluminium, tandem, compact, closed	BOOK 2	285
Linear modules Lifting units Rotary modules Grip modules	BOOK 2	43
Linear modules pneumatic with rail guide	BOOK 2	52-57
Linear modules pneumatic with three round guides	BOOK 2	48-49
Linear modules pneumatic with two round guides	BOOK 2	46-47
Linear plain bearings	BOOK 2	265
Linear scales self adhesive or with screw holes, aluminium	BOOK 2	314
Linear scales self-adhesive or with screw holes, aluminium	BOOK 2	315
Linear scales self-adhesive, stainless steel	BOOK 2	313
Links DIN ISO 606	BOOK 2	395, 399
Links stainless steel DIN ISO 606	BOOK 2	400
Locating bushes for ball lifting pins stainless steel, flat	BOOK 1	1191
Locating bushes for locating pins	BOOK 1	121
Locating bushes for pneumatic locating cylinder	BOOK 1	324-325
Locating bushes Form A (pressed in from rear)	BOOK 1	310
Locating bushes Form B (screwed down from front)	BOOK 1	311
Locating bushes stainless steel for ball lock pins	BOOK 1	420
Locating bushes with collar, stainless steel for ball lock pins	BOOK 1	362
Locating bushes, stainless steel Form A (pressed in from rear)	BOOK 1	310
Locating bushes, stainless steel Form B (screwed down from front)	BOOK 1	311
Locating cylinder Ball Lock	BOOK 1	305
Locating cylinder, stainless steel Ball Lock	BOOK 1	306
Locating cylinders pneumatic	BOOK 1	322-323
Locating cylinders with quick clamping system	BOOK 1	307
Locating feet	BOOK 1	140
Locating pins and rest pads DIN 6321 (Issue 1973)	BOOK 1	116
Locating pins ceramic similar to DIN 6321	BOOK 1	118-119
Locating pins expanding	BOOK 1	298
Locating pins removable Form A and C	BOOK 1	291
Locating pins removable Form B and D	BOOK 1	291
Locating pins with ball-end Form A	BOOK 1	292
Locating pins with ball-end Form B	BOOK 1	293
Locating pins with flattened ball-end Form C	BOOK 1	292
Locating pins with flattened ball-end Form D	BOOK 1	293
Locating pins with internal thread	BOOK 1	120
Locators	BOOK 1	198
Lock grips	BOOK 1	830
Locking pins	BOOK 1	356
Locking pins with axial locking	BOOK 1	395
Locking pins with folding latch	BOOK 1	394
Locking pins with key ring	BOOK 1	357
Locking pins with magnetic axial lock	BOOK 1	396
Locking plate steel or stainless steel DIN 5406	BOOK 1	1146-1147
LOCTITE activators	BOOK 2	1286
LOCTITE adhesive and sealant	BOOK 2	1283
LOCTITE cleaner	BOOK 2	1285
LOCTITE flange sealant	BOOK 2	1282
LOCTITE liquid epoxy metals	BOOK 2	1278
LOCTITE retaining compound	BOOK 2	1284
LOCTITE thread sealant	BOOK 2	1281
LOCTITE threadlocker	BOOK 2	1279
LOCTITE universal adhesive	BOOK 2	1280
Low-profile clamps	BOOK 1	523
L-profiles grey cast iron or aluminium	BOOK 1	81
L-profiles unequal grey cast iron or aluminium	BOOK 1	82
Lubricants Adhesives Grease nipples	BOOK 2	1265
Lubricating greases	BOOK 2	1269
M		**Page**
Machinable collets pneumatic	BOOK 1	340-341
Machinable collets, square	BOOK 1	326-327
Machine feet	BOOK 2	836
Machine feet with vibration absorption	BOOK 2	865
Machine feet, aluminium with vibration absorption screw-on	BOOK 2	840
Machine handles fixed aluminium, DIN 39 Form E	BOOK 1	811
Machine handles fixed steel, DIN 39 Form E	BOOK 1	810

Index

Machine handles fixed steel, similar to DIN 39	BOOK 1	810
Machine handles fixed straight form, similar to DIN 39	BOOK 1	814
Machine handles revolving	BOOK 1	815
Machine handles revolving aluminium, similar to DIN 98 Form E	BOOK 1	812
Machine handles revolving similar to DIN 98 Form E, stainless steel	BOOK 1	813
Machine handles revolving similar to DIN 98 Form E, steel	BOOK 1	812
Machine handles revolving steel, similar to DIN 98	BOOK 1	814
Machine handles revolving straight form, similar to DIN 98	BOOK 1	815
Machine handles, fixed, DIN 39 Form E, stainless steel	BOOK 1	811
Magnetic base, permanent	BOOK 1	1255
Magnetic C profiles	BOOK 2	1239
Magnetic clamping balls	BOOK 1	1256
Magnetic envelopes	BOOK 2	1240
Magnetic envelopes with strong magnetics	BOOK 2	1240
Magnetic labels	BOOK 2	1238
Magnetic labels on a roll, perforated	BOOK 2	1238
Magnetic lock	BOOK 1	206
Magnetic Pickup	BOOK 1	1255
Magnetic sensors passive sensors, miniature design	BOOK 2	304
Magnetic sensors, passive sensors, miniature design IO link interface	BOOK 2	324
Magnetic stands	BOOK 2	1052-1053
Magnetic tape rolls	BOOK 2	1239
Magnetic tape scale with incremental coding, 5 mm pole length	BOOK 2	305
Magnets	BOOK 1	1229
Magnets button	BOOK 1	1249
Magnets deep pot	BOOK 1	1248
Magnets deep pot AlNiCo with fitting tolerance	BOOK 1	1235
Magnets deep pot AlNiCo without fitting tolerance	BOOK 1	1235
Magnets deep pot NdFeB	BOOK 1	1239
Magnets deep pot SmCo	BOOK 1	1238
Magnets deep pot with internal thread NdFeB	BOOK 1	1241
Magnets deep pot with machinable magnetic face NdFeB	BOOK 1	1240
Magnets deep pot with pin AlNiCo	BOOK 1	1236
Magnets deep pot with threaded pin NdFeB, rubber magnetic face	BOOK 1	1253
Magnets raw AlNiCo, bar type	BOOK 1	1233
Magnets raw NdFeB, block form	BOOK 1	1233
Magnets raw NdFeB, disc form	BOOK 1	1232
Magnets raw with hole NdFeB, disc form	BOOK 1	1232
Magnets shallow pot	BOOK 1	1248
Magnets shallow pot hard ferrite	BOOK 1	1236
Magnets shallow pot NdFeB	BOOK 1	1242
Magnets shallow pot SmCo	BOOK 1	1238
Magnets shallow pot with counterbore hard ferrite	BOOK 1	1244
Magnets shallow pot with counterbore SmCo with stainless-steel housing	BOOK 1	1244
Magnets shallow pot with countersink hard ferrite	BOOK 1	1245
Magnets shallow pot with countersink hard ferrite with stainless-steel housing	BOOK 1	1245
Magnets shallow pot with countersink NdFeB	BOOK 1	1246
Magnets shallow pot with countersink SmCo	BOOK 1	1246
Magnets shallow pot with hook NdFeB	BOOK 1	1243
Magnets shallow pot with internal thread hard ferrite	BOOK 1	1247
Magnets shallow pot with internal thread hard ferrite with stainless-steel housing	BOOK 1	1237
Magnets shallow pot with internal thread NdFeB	BOOK 1	1247
Magnets shallow pot with internal thread NdFeB, with rubber protective jacket	BOOK 1	1250
Magnets shallow pot with tapped pin NdFeB, with rubber protective jacket	BOOK 1	1252
Magnets shallow pot with thread hard ferrite	BOOK 1	1237
Magnets shallow pot with threaded pin NdFeB, with rubber protective jacket	BOOK 1	1252
Magnets shallow pot with through hole NdFeB, with rubber protective jacket	BOOK 1	1253
Magnets strong	BOOK 1	1249
Magnets with internal thread NdFeB, rectangular, with rubber protective jacket	BOOK 1	1251
Mandrel collet for small bores	BOOK 1	314
Mandrel collets	BOOK 1	312
Mandrel collets with side lock	BOOK 1	313
Mandrel collets, steel with cam lever	BOOK 1	315
Manual clamp vertical with hole pattern on the front	BOOK 1	672-673
Material handling and transport	BOOK 2	1181
Measuring arms	BOOK 2	1093
Measuring element for gear wheels	BOOK 2	1098
Measuring fixtures	BOOK 2	1091-1092
Metal bellows couplings clamping with grub screw	BOOK 2	572
Metal bellows couplings with radial clamping hub	BOOK 2	571
Mini clamp for horizontal installation	BOOK 1	670-671
Mini clamp manual operated	BOOK 1	666-667
Mini clamps	BOOK 1	664-665
Miniature ball screw linear actuators ground, with flange nut	BOOK 2	712-713
Miniature ball screw linear actuators ground, with screw-in cylinder nut	BOOK 2	714-715
Miniature carriages stainless steel	BOOK 2	260
Miniature linear ball bearing	BOOK 2	270
Miniature linear guides DryLin® T	BOOK 2	178-179
Miniature profile guide rails stainless steel	BOOK 2	261
Miniature slide guides DryLin® N	BOOK 2	181-183
Monitor brackets	BOOK 2	1036-1041
Motor adapter sets	BOOK 2	85
Motors Lifting columns	BOOK 2	1169
Mounting bracket, steel for telescopic slides	BOOK 2	247
Mounting brackets	BOOK 2	98, 328
Mounting brackets aluminium	BOOK 1	282-283
Mounting brackets stainless steel	BOOK 2	781
Mounting brackets steel	BOOK 1	280
Mounting brackets, steel for roller rails	BOOK 1	1309
Mounting flange	BOOK 2	780
Mounting plates aluminium for precision vices	BOOK 2	1104
Mounting plates horizontal	BOOK 2	138
Mounting plates vertical	BOOK 2	140-141
Mounting screws for idler sprockets	BOOK 2	476
Multiple connectors	BOOK 1	925
Mushroom knobs antistatic external thread	BOOK 1	767
Mushroom knobs antistatic internal thread	BOOK 1	765
Mushroom knobs external thread	BOOK 1	761, 763, 766
Mushroom knobs internal thread	BOOK 1	761, 763-764
Mushroom knobs with internal thread	BOOK 1	762
N		**Page**
Needle support	BOOK 2	1106
Neoprene connecting isolators, two-piece	BOOK 2	766-767
Net mats	BOOK 2	1243
Net sleeves	BOOK 2	1241
Nuts for T-slots blanks	BOOK 1	1022
Nuts for T-slots DIN 508 enhanced	BOOK 1	1021
Nuts for T-slots long	BOOK 1	1022
Nuts for T-slots rhombic form	BOOK 1	1027
O		**Page**
Oil level gauges	BOOK 2	954-955
Oil level gauges Caps Plugs Vent screws Dipsticks Filler necks	BOOK 2	953
Oil level gauges long version	BOOK 2	959
Oil level gauges with electronic oil level and temperature monitoring	BOOK 2	958

Index

Oil level gauges with electronic oil level and temperature monitoring, long version	BOOK 2	962-963
Oil level gauges with electronic oil level monitoring	BOOK 2	956
Oil level gauges with electronic oil level monitoring, long version	BOOK 2	960
Oil level gauges with electronic temperature monitoring	BOOK 2	957
Oil level gauges with electronic temperature monitoring, long version	BOOK 2	961
Oil level sight glasses	BOOK 2	964
Oil level sight glasses aluminium	BOOK 2	966
Oil level sight glasses aluminium, glass window	BOOK 2	966
Oil level sight glasses domed	BOOK 2	965
Oil level sight glasses press-in	BOOK 2	965
Oldham-type couplings clamping with grub screw	BOOK 2	581
Oldham-type couplings with radial clamping hub	BOOK 2	580
Opening grips	BOOK 1	645
Operating parts	BOOK 1	703
O-rings	BOOK 2	674-679
O-shaped mounts	BOOK 2	765
P		**Page**
Palm grips aluminium, similar to DIN 6335	BOOK 1	728-729
Palm grips grey cast iron DIN 6335	BOOK 1	732
Palm grips plastic coated grey cast iron, DIN 6335	BOOK 1	733
Palm grips quick-acting grey cast iron	BOOK 1	736
Palm grips similar to DIN 6335	BOOK 1	734
Palm grips similar to DIN 6335 metal parts stainless-steel	BOOK 1	735
Palm grips stainless steel, similar to DIN 6335	BOOK 1	730-731
Palm grips with threaded spindle	BOOK 1	733
Parallel block sets	BOOK 1	367
Parallel blocks pair DIN 6346	BOOK 1	366
Parallel key, ceramic similar to DIN 6885 A	BOOK 1	372
Parallel keys DIN 6885 A	BOOK 1	371
Pendulum jaws	BOOK 2	1119
Permanent workholding magnets with fine pole division	BOOK 1	1234
Pillow block bearing flange type	BOOK 2	727, 732
Pillow block bearing flange type 2-hole	BOOK 2	729, 733
Pillow block bearing flange type MUCF 2-hole stainless steel	BOOK 2	728
Pillow block bearing flange type MUCF stainless steel	BOOK 2	726
Pillow block bearing flange type UCF	BOOK 2	717
Pillow block bearing flange type UCFC with centring hub	BOOK 2	718
Pillow block bearing flange type UCFL 2-hole	BOOK 2	719
Pillow block bearing pedestal type	BOOK 2	724-725, 731
Pillow block bearing pedestal type BPP	BOOK 2	720
Pillow block bearing pedestal type MUCP stainless steel	BOOK 2	723
Pillow block bearing pedestal type UCP	BOOK 2	716
Pin connector sets Type B	BOOK 1	1280
Pin with circlip groove suitable for clevis joints	BOOK 2	793-794
Pin with hole for split pin suitable for clevis joints	BOOK 2	795
Pivot bearing, steel with external thread	BOOK 1	579
Pivot heads swivel angle 30°	BOOK 2	171
Pivoting columns	BOOK 2	1089
Pivoting systems	BOOK 2	1090
Plain bearing for rotary stages	BOOK 2	190
Plain bearing sintered bronze cylindrical	BOOK 2	654-655
Plain bearing sintered bronze with collar	BOOK 2	656-657
Plain bearings cylindrical	BOOK 2	650-651
Plain bearings for rotary stages	BOOK 2	189
Plain bearings plastic	BOOK 2	646-647
Plain bearings with collar	BOOK 2	652
Planetary gearing for stepper motors	BOOK 2	567
Plastic grips	BOOK 1	596, 612, 675
Plastic protective net caps	BOOK 2	1242
Plastic roller elements for roller rails	BOOK 1	1303
Plastic roller elements, compact for roller rails	BOOK 1	1304
Plastic separators for Euro containers	BOOK 2	1244
Plastic slide rails for roller rails	BOOK 1	1307
Plastic slide ramps for roller rails	BOOK 1	1307
Plate, steel open	BOOK 1	580
Plates grey cast iron or aluminium	BOOK 1	65
Plugs fill only knurled cap	BOOK 2	977
Pneumatic clamp	BOOK 1	604-605
Pneumatic clamps push-rod	BOOK 1	608
Pneumatic clamps vertical heavy-duty version	BOOK 1	609
Pneumatic clamps vertical with vertical cylinder bracket	BOOK 1	606-607
Pneumatic clamps vertical with vertical mounted cylinder	BOOK 1	610
Pneumatic compact cylinders DIN ISO 21287, double-acting with magnetic piston	BOOK 1	1334-1335
Pneumatic compact cylinders DIN ISO 21287, double-acting with magnetic piston	BOOK 2	1255-1256
Pneumatic cylinders DIN ISO 15552 standard cylinder	BOOK 1	1330-1332
Pneumatic round cylinders DIN ISO 6432, double-acting with magnetic piston	BOOK 1	1336-1337
Pneumatic technology	BOOK 1	1329
Position indicator quasi-absolute, mains-independent, indicator accuracy 10 µm	BOOK 2	303
Position indicator quasi-absolute, mains-independent, indicator accuracy 10 µm, small design	BOOK 2	302
Position indicator, plastic, electronic IO link interface	BOOK 2	322-323
Position indicators	BOOK 2	317-319
Position indicators for handwheels analogue-digital display	BOOK 2	330
Position indicators freely programmable	BOOK 2	320-321, 326
Positioning brackets	BOOK 1	367
Positioning bush steel for centring units	BOOK 1	303
Positioning bushes for indexing plungers	BOOK 1	281
Positioning cones, steel for centring units	BOOK 1	302
Positioning feet	BOOK 1	130-133
Positioning pins cylindrical ground	BOOK 1	296
Positioning pins cylindrical not ground	BOOK 1	296
Positioning pins free-milled ground	BOOK 1	297
Positioning pins free-milled not ground	BOOK 1	297
Positioning stages long with coaxial electric drive	BOOK 2	128-129
Positioning stages long with lateral electric drive	BOOK 2	130-131
Positioning stages rotary with coaxial electric drive	BOOK 2	132-134
Positioning stages short with coaxial electric drive	BOOK 2	124-125
Positioning stages short with lateral electric drive	BOOK 2	126-127
Positioning stages, long	BOOK 2	148
Positioning stages, long with electronic position indicator	BOOK 2	150-151
Positioning stages, long with position indicator	BOOK 2	149
Positioning stages, short	BOOK 2	145
Positioning stages, short with electronic position indicator	BOOK 2	147
Positioning stages, short with position indicator	BOOK 2	146
Potential equaliser Type I	BOOK 1	1314
Power clamp	BOOK 1	567
Power clamp 3 stage	BOOK 1	568-569
Power supply units	BOOK 2	1149
Precision guide shafts	BOOK 2	300
Precision guide shafts with fastening holes	BOOK 2	298-299
Precision slides roller mounted	BOOK 2	103
Precision slides roller mounted with end plates	BOOK 2	105
Precision slides roller mounted with end plates and location holes	BOOK 2	120-121
Precision slides roller mounted with location holes	BOOK 2	118-119
Precision slides roller mounted with micrometer spindle	BOOK 2	106
Precision slides roller mounted with micrometer spindle and location holes	BOOK 2	122-123
Precision three-jaw chuck manual operation	BOOK 2	1105
Precision vice	BOOK 2	1100-1101
Precision vices stainless steel, aluminium or brass, mini	BOOK 2	1102
Press-in plugs	BOOK 2	972
Press-in plugs with dipstick	BOOK 2	982

Index

Prism attachments	BOOK 2	1087
Prisms, steel, for chain clamp sets	BOOK 1	449
Probe insert set 11-piece	BOOK 2	1079
Probe inserts carbide thread M2.5	BOOK 2	1081
Probe inserts hardened steel thread M2.5	BOOK 2	1080
Probe inserts knife point	BOOK 2	1077
Probe inserts with ball point	BOOK 2	1076
Probe inserts with domed face	BOOK 2	1078
Probe inserts with domed point	BOOK 2	1076
Probe inserts with enlarged flat face	BOOK 2	1078
Probe inserts with flat face	BOOK 2	1077
Probe knife point	BOOK 2	1074
Probe knife point offset	BOOK 2	1074
Probe knife point offset, for fixed stop	BOOK 2	1075
Probe with flat face	BOOK 2	1072
Probe with flat point	BOOK 2	1072
Probe with reduced domed point	BOOK 2	1073
Probe with reduced flat face	BOOK 2	1073
Profile damper axial damping, soft version	BOOK 2	770
Profile damper radial damping	BOOK 2	771
Profile damper radial damping, hard version	BOOK 2	772
Profile dampers axial damping	BOOK 2	769
Profile guide rails	BOOK 2	259
Protection frames for dial gauges	BOOK 2	1082
Protective caps	BOOK 1	598
Protective rubber caps for shallow pot magnets	BOOK 1	1250
Protective rubber sleeves for universal and cardan joints (double)	BOOK 2	632
Protective rubber sleeves for universal and cardan joints (single)	BOOK 2	632
Pull clamps	BOOK 1	494
Pull clamps (high force)	BOOK 1	495
Pull clamps pneumatic	BOOK 1	496-497
Pull handles 953-954, 957, 959, 962-964, 973, 978, 981-983, 994-995	BOOK 1	950-951,
Pull handles angled 994, 1012	BOOK 1	974, 985,
Pull handles antistatic	BOOK 1	956
Pull handles arch	BOOK 1	958-960
Pull handles fold-down	BOOK 1	984
Pull handles high temperature resistant	BOOK 1	955, 965
Pull handles high-gloss chromed	BOOK 1	979
Pull handles oblique	BOOK 1	960
Pull handles open-ended screw on	BOOK 1	1003
Pull handles oval 969-970	BOOK 1	967,
Pull handles oval detachable	BOOK 1	971-972
Pull handles round	BOOK 1	966, 968
Pull handles stainless steel 973-974, 980	BOOK 1	962,
Pull handles tubular 986, 989-992	BOOK 1	975-976,
Pull handles tubular adjustable	BOOK 1	996
Pull handles tubular angled	BOOK 1	985
Pull handles tubular oblique	BOOK 1	977
Pull handles tubular stainless steel	BOOK 1	993
Pull handles with soft inner face	BOOK 1	961
Pull handles, plastic oval	BOOK 1	952
Pump spray bottles	BOOK 2	1293
Push-pull clamps heavy-duty version with handle	BOOK 1	674
Push-Pull spring plungers	BOOK 1	389
Push-Pull spring plungers with rotation lock	BOOK 1	390
Push-type grease guns	BOOK 2	1287
Q		**Page**
Quarter-turn lock stainless steel with wing grip	BOOK 1	637
Quarter-turn lock, stainless steel	BOOK 1	622
Quarter-turn locks	BOOK 1	626
Quarter-turn locks compact	BOOK 1	621
Quarter-turn locks compact lockable	BOOK 1	624
Quarter-turn locks compact with wing grip	BOOK 1	623
Quarter-turn locks for sterile areas	BOOK 1	655
Quarter-turn locks free-turning	BOOK 1	643
Quarter-turn locks in Hygienic DESIGN	BOOK 1	656-657
Quarter-turn locks in Hygienic DESIGN with T-grip	BOOK 1	652
Quarter-turn locks lockable, stainless steel	BOOK 1	631
Quarter-turn locks long version	BOOK 1	634-635
Quarter-turn locks polyamide	BOOK 1	633
Quarter-turn locks stainless steel	BOOK 1	647
Quarter-turn locks stainless steel with L-grip	BOOK 1	653-654
Quarter-turn locks stainless steel with T-grip	BOOK 1	650-651
Quarter-turn locks stainless steel with wing grip	BOOK 1	649
Quarter-turn locks stainless steel, lockable	BOOK 1	648
Quarter-turn locks stainless steel, small version	BOOK 1	627, 630
Quarter-turn locks with cam tongue	BOOK 1	642
Quarter-turn locks with L-grip	BOOK 1	639
Quarter-turn locks with T-grip	BOOK 1	638
Quarter-turn locks with wing grip	BOOK 1	636
Quarter-turn locks, stainless steel long version	BOOK 1	628-629
Quarter-turn screws	BOOK 1	1141
Quarter-turn security locks, stainless steel	BOOK 1	644
Quick-fit couplings with angular and radial offset compensation	BOOK 2	638
Quick-fit couplings with radial offset compensation	BOOK 2	634-635
Quick-fit couplings with radial offset compensation and mounting flange	BOOK 2	636-637
R		**Page**
Ratchet elements steel or stainless steel	BOOK 1	1214-1215
Ratchet levers	BOOK 1	884-885
R-clips similar to DIN 11024	BOOK 1	1127
Receiver bush stainless steel, for lifting pins	BOOK 1	1193
Receiver bushes for ball lifting pins, stainless steel	BOOK 1	1190
Recessed grips clip-in	BOOK 1	1009
Recessed handles	BOOK 1	1004, 1008
Recessed handles fold-down	BOOK 1	1005, 1007
Recessed handles fold-down stainless steel	BOOK 1	1010
Recessed handles fold-down, stainless steel	BOOK 1	1006
Recessed handles, fold down DIN 3136	BOOK 1	1011
Rectangular hollow profiles grey cast iron	BOOK 1	86
Rectangular plates precision steel	BOOK 1	64
Rectangular support elements	BOOK 1	156
Reducer sleeves	BOOK 2	307
Reducer sleeves round	BOOK 2	1021
Reducer sleeves square	BOOK 2	1021
Reducing bushings	BOOK 2	327
Reinforced hoses for DIN 1283 grease guns	BOOK 2	1292
Repair kit	BOOK 1	1167
Rest pads 141-142, 1220	BOOK 1	114, 124,
Rest pads adjustable with locknut	BOOK 1	141
Rest pads pin form, external thread	BOOK 1	123
Rest pads pin form, internal thread	BOOK 1	122
Rest pads with positioning pin	BOOK 1	125
Rest pads, ceramic	BOOK 1	115
Retaining cables	BOOK 1	365
Retaining clips DIN 9832	BOOK 2	644
Retaining magnets hard ferrite	BOOK 1	1254
Rigid couplings one-piece	BOOK 2	582
Rigid couplings two-piece	BOOK 2	583
Ring bolts DIN 580	BOOK 1	1171
Ring bolts rotatable high-strength grade 10	BOOK 1	1175
Ring bolts similar to DIN 580	BOOK 1	1172
Ring bolts swivel and 360° rotatable, grade 8	BOOK 1	1176

Index

Ring nuts DIN 582	BOOK 1	1173
Ring nuts similar to DIN 582	BOOK 1	1174
Riser bars	BOOK 1	487
Riser blocks with draw bolt	BOOK 1	565
Riser stops	BOOK 1	522
Risers for power clamp	BOOK 1	570
Rod ends igubal® with plain bearing external thread	BOOK 2	803
Rod ends igubal® with plain bearing internal thread	BOOK 2	805
Rod ends with ball bearing external thread	BOOK 2	800
Rod ends with ball bearing internal thread	BOOK 2	801
Rod ends with plain bearing external thread	BOOK 2	802
Rod ends with plain bearing external thread, narrow version	BOOK 2	808
Rod ends with plain bearing external thread, stainless steel	BOOK 2	806
Rod ends with plain bearing internal thread	BOOK 2	804
Rod ends with plain bearing internal thread, narrow version	BOOK 2	809
Rod ends with plain bearing internal thread, stainless steel	BOOK 2	807
Rod-end eyes	BOOK 2	790
Rods stainless steel	BOOK 2	1047
Roll dowel heavy duty ISO 8752	BOOK 1	375
Roller cages for guide rails	BOOK 2	108
Roller carriages compact and heavy-duty version	BOOK 2	195
Roller carriages steel	BOOK 2	197
Roller chain duplex, stainless steel DIN ISO 606, curved link plate	BOOK 2	401
Roller chains duplex DIN ISO 606, curved link plate	BOOK 2	396
Roller chains single DIN ISO 606, curved link plate	BOOK 2	394
Roller chains single DIN ISO 606, straight link plate	BOOK 2	399
Roller chains single stainless steel DIN ISO 606, curved link plate	BOOK 2	400
Roller chains triplex DIN ISO 606, curved link plate	BOOK 2	398
Roller chains, steel, for chain clamp sets	BOOK 1	447
Roller elements	BOOK 1	1310
Roller guide carriage steel	BOOK 2	198
Roller guide rails	BOOK 2	196, 199
Rollers heavy-load	BOOK 2	1210
Rotary discs	BOOK 2	164
Rotary module pneumatic	BOOK 2	67-69, 71
Rotary module pneumatic heavy duty version	BOOK 2	70, 72
Rotary positioning stages	BOOK 2	165
Rotary positioning stages with position indicators	BOOK 2	166
Rotary shaft lip seals DIN 3760	BOOK 2	680-683
Rotary stages with coaxial electric drive, high load	BOOK 2	136-137
Rotary stages with electronic position indicator	BOOK 2	168-169
Rotation dampers, steel rotation right, left or both directions	BOOK 2	784-785
Round and square tubes	BOOK 2	1022
Round bars	BOOK 2	1263
Round brackets	BOOK 2	815
Round sling hooks grade 8	BOOK 1	1200
Round sling links grade 8	BOOK 1	1201
Round slings	BOOK 1	1202
Rubber buffers conical	BOOK 2	763
Rubber buffers parabolic	BOOK 2	762
Rubber buffers spherical	BOOK 2	763
Rubber buffers stainless steel, type B	BOOK 2	753
Rubber buffers stainless steel, type C	BOOK 2	757
Rubber buffers stainless steel, type D	BOOK 2	760
Rubber buffers stainless steel, type E	BOOK 2	755
Rubber buffers steel or stainless steel, type A	BOOK 2	750
Rubber buffers steel or stainless steel, type B	BOOK 2	752
Rubber buffers steel or stainless steel, type C	BOOK 2	756
Rubber buffers steel or stainless steel, type D	BOOK 2	759
Rubber buffers type AT tapered	BOOK 2	751
Rubber buffers type CT tapered	BOOK 2	758
Rubber buffers type DS suction foot	BOOK 2	761
Rubber buffers type E	BOOK 2	754
Rubber impact buffers type TP door buffer	BOOK 2	761
Rubber-metal impact buffer rails	BOOK 2	764

S		Page
Safety cable	BOOK 1	363
Safety cylindrical grips, plastic auto-return	BOOK 1	825
Safety spiral cable	BOOK 1	363
Scale tape, steel self-adhesive	BOOK 2	316
Screw plugs	BOOK 2	970, 975
Screw plugs aluminium	BOOK 2	974
Screw plugs aluminium with magnet	BOOK 2	973
Screw plugs brass, round	BOOK 2	1167
Screw plugs hex head with collar DIN 910	BOOK 2	969
Screw plugs plastic, round	BOOK 2	1166
Screw plugs with collar and hexagon socket DIN 908	BOOK 2	968
Screw plugs with dipstick	BOOK 2	976
Screw plugs with hexagon socket	BOOK 2	971
Screw plugs with hexagon socket DIN 906, tapered thread	BOOK 2	967
Screw plugs with magnet	BOOK 2	973
Screw rest inserts spherical, centring disc, prism, locating pin, revolving ball	BOOK 1	148
Screw rest with flat face and magnetic foot, aluminium	BOOK 1	146
Screw rest with flat face, aluminium	BOOK 1	146
Screw rest with flat face, stainless steel	BOOK 1	145
Screw rest with flat face, steel	BOOK 1	145
Screw stops adjustable	BOOK 1	213
Screwed-down counter version	BOOK 2	1259
Screwed-down floor version	BOOK 2	1256
Screws with countersunk head hexagon socket DIN EN ISO 10642	BOOK 1	1090
Seating blocks adjustable	BOOK 1	535
Seating ledges	BOOK 2	1124
Security hinge switches	BOOK 2	950
Security hinge switches long version	BOOK 2	951
Self-aligning pads	BOOK 1	94-95
Self-aligning pads adjustable	BOOK 1	103
Self-aligning pads adjustable with O-ring	BOOK 1	104-105
Self-aligning pads adjustable with O-ring and exchangeable inserts	BOOK 1	106-109
Self-aligning pads adjustable with O-ring and hexagon socket	BOOK 1	110-111
Self-aligning pads adjustable with O-ring, exchangeable inserts and hexagon socket	BOOK 1	112-113
Self-aligning pads Fixture feet Clamp rests Support elements	BOOK 1	93
Self-aligning pads self-righting	BOOK 1	102, 138-139
Self-aligning pads swivel 12°	BOOK 1	136
Self-aligning pads swivel angle 14° and 20°	BOOK 1	96-97
Self-aligning pads with O-ring	BOOK 1	98-99
Self-aligning pads with O-ring and exchangeable inserts	BOOK 1	100-101
Self-locking hooks grade 10	BOOK 1	1196
Sensor holder	BOOK 2	142-143
Sensor holders	BOOK 1	1313
Sensor technology	BOOK 2	1153
Separator, plastic for energy chains, inner height 17 mm	BOOK 2	1139
Separator, plastic for energy chains, inner height 25 mm	BOOK 2	1142
Separator, plastic for energy chains, inner height 35 mm	BOOK 2	1145
Separator, plastic for energy chains, inner height 45 mm	BOOK 2	1148
Shaft clamping units	BOOK 1	392
Shaft collars one-piece	BOOK 1	1207
Shaft collars one-piece wide	BOOK 1	1209
Shaft collars one-piece, with clamping lever	BOOK 1	1208
Shaft collars set screw DIN 705, stainless steel	BOOK 1	1206
Shaft collars set screw DIN 705, steel	BOOK 1	1204-1205
Shaft collars two-piece	BOOK 1	1210
Shaft collars two-piece wide	BOOK 1	1211
Shaft collars with thread	BOOK 1	1212
Shaft supports	BOOK 2	290, 293
Shaft supports flanged	BOOK 2	296

Index

Shaft supports standard	BOOK 2	295
Shaft supports, aluminium, compact	BOOK 2	294
Shaft-hub clamping sets stainless steel	BOOK 2	614
Shim washers DIN 988	BOOK 1	1135
Shortening hooks grade 10	BOOK 1	1197
Shoulder screws flathead for DIN 173 drill bushes	BOOK 1	1228
Shoulder screws Form B	BOOK 1	1137
Shoulder screws similar to DIN ISO 7379	BOOK 1	1138
Shoulder screws with hexagon head similar to DIN 609	BOOK 1	1139
Shoulder screws with slotted domed head	BOOK 1	1140
Shoulder screws with slotted flat head DIN 923	BOOK 1	1136
Shrink discs Form A	BOOK 2	616-617
Shrink discs Form B	BOOK 2	620-621
Shrink discs stainless steel Form A	BOOK 2	618-619
Side brackets	BOOK 2	814
Side Clamp	BOOK 1	559
Side clamp with cam	BOOK 1	536
Side clamps	BOOK 1	524, 530,
534, 537-539, 549, 551, 557-558		
Side clamps robust	BOOK 1	532
Side clamps with rest pad	BOOK 1	531
Side clamps with support	BOOK 1	525
Side stops	BOOK 1	550
Single leaf hinges adjustable, stainless steel	BOOK 2	914
Slam latches	BOOK 1	658
Slide carriages DryLin® W	BOOK 2	186
Slide rails Type I	BOOK 1	1298
Slides Guide rails Positioning stages Linear guide systems		
Position indicators	BOOK 2	91
Slides mini roller mounted	BOOK 2	104
Slip hooks grade 10	BOOK 1	1195
Slot key profile type I	BOOK 1	1025
Slot keys	BOOK 1	368
Slot keys loose DIN 6323	BOOK 1	370
Slot keys with locating pin	BOOK 1	370
Slot nuts strong Type I	BOOK 1	1025
Slot nuts twist-in Type B	BOOK 1	1026
Slot nuts twist-in Type I	BOOK 1	1023
Slot nuts twist-in with spring Type B	BOOK 1	1026
Slot nuts twist-in, keyed Type I	BOOK 1	1024
Slotted nuts with elastic lock	BOOK 1	1149
Slotted round nuts	BOOK 2	1088
Slotted round nuts DIN 1804	BOOK 1	1142
Slotted round nuts, steel or stainless steel, DIN 981	BOOK 1	120-121,
1144-1145		
Slotted round nuts, steel, DIN 70852	BOOK 1	1148
Small conveyor belts with internal drive	BOOK 2	1225
Snap-in pins for DIN 71752 clevis joints	BOOK 2	792
Snapper catch with spring DIN 6310	BOOK 1	1140
Socket head screws DIN 912 / DIN EN ISO 4762,		
steel or stainless steel	BOOK 1	1070-1071
Socket head screws DIN 912 / EN ISO 4762,		
LONG-LOK secured	BOOK 1	1073
Socket head screws DIN 912/DIN EN ISO 4762	BOOK 1	1072
Socket head screws full thread, DIN 912 / DIN EN ISO 4762	BOOK 1	1069
Socket head screws low head DIN 6912	BOOK 1	1074-1075
Spacer bolts	BOOK 1	465
Spacer for ball catch	BOOK 1	204
Spacer rings	BOOK 1	238
Spacer washers ground	BOOK 1	1136
Spacer washers, steel or stainless steel	BOOK 2	834
Spacers for prisms attachments	BOOK 2	1087
Spacers, plastic for roller rails	BOOK 1	1306
Spherical bearings K/E series DIN ISO 12240-1	BOOK 2	810
Spherical knobs	BOOK 1	768
Spherical knobs revolving	BOOK 1	769
Spherical levelling washers	BOOK 1	1134
Spherical roller bearing FAG cylindrical bore	BOOK 2	670
Spherical seating nuts	BOOK 1	700
Spherical washers DIN 6319, edition 10/01	BOOK 1	1132-1133
Spiral cam screws	BOOK 1	514
Spiral cams	BOOK 1	468
Splined hubs round similar to DIN ISO 14	BOOK 2	695
Splined hubs with flange similar to DIN ISO 14	BOOK 2	696
Splined shafts AT profile	BOOK 2	351
Splined shafts similar to DIN ISO 14	BOOK 2	694
Splined shafts T profile	BOOK 2	350
Split pins EN ISO 1234	BOOK 1	1126
Spring fingers	BOOK 2	1107
Spring hinges aluminium profile tension spring hinges,		
0.20 Nm	BOOK 2	942
Spring hinges aluminium profile tension spring hinges,		
0.35 Nm	BOOK 2	943
Spring hinges aluminium profile tension spring hinges,		
0.7 Nm	BOOK 2	945
Spring hinges aluminium profile tension spring hinges,		
1.3 Nm	BOOK 2	948
Spring hinges aluminium profile tension spring hinges,		
3.8 Nm	BOOK 2	949
Spring hinges aluminium profile, 0.50 Nm	BOOK 2	944
Spring hinges aluminium profile, 0.7 Nm, long version	BOOK 2	946
Spring hinges aluminium profile, 0.9 Nm, long version	BOOK 2	947
Spring hinges steel or stainless steel, 180 mm	BOOK 2	940
Spring hinges steel or stainless steel, 240 mm	BOOK 2	941
Spring hinges steel or stainless steel, 75 mm	BOOK 2	938
Spring hinges steel, stainless steel or aluminium, 120 mm	BOOK 2	939
Spring hinges steel, stainless steel or aluminium, 50 mm	BOOK 2	937
Spring mounted centre sleeves with tension lever	BOOK 2	1094
Spring plungers Indexing plungers Stops		
Centring/positioning components Ball lock pins T-slot nuts	BOOK 1	161
Spring plungers smooth version	BOOK 1	210
Spring plungers smooth version without collar, stainless steel	BOOK 1	201
Spring plungers smooth version, double-sided	BOOK 1	202
Spring plungers smooth version, extended, stainless steel	BOOK 1	198
Spring plungers smooth version, plastic	BOOK 1	200
Spring plungers smooth version, self-clamping, plastic	BOOK 1	209
Spring plungers smooth version, stainless steel	BOOK 1	199
Spring plungers with detent ring	BOOK 1	197
Spring plungers with head	BOOK 1	196, 201
Spring plungers with hexagon socket and ball,		
LONG-LOK secured stainless steel	BOOK 1	178
Spring plungers with hexagon socket and ball,		
LONG-LOK secured, steel	BOOK 1	175
Spring plungers with hexagon socket and ball,		
stainless steel	BOOK 1	177
Spring plungers with hexagon socket and ball, steel	BOOK 1	174
Spring plungers with hexagon socket and ceramic ball,		
stainless steel	BOOK 1	176
Spring plungers with hexagon socket and flattened		
POM thrust pin, stainless steel	BOOK 1	193
Spring plungers with hexagon socket and flattened		
POM thrust pin, stainless steel, LONG-LOK lock	BOOK 1	195
Spring plungers with hexagon socket and flattened		
POM thrust pin, steel	BOOK 1	185
Spring plungers with hexagon socket and flattened		
POM thrust pin, steel, LONG-LOK lock	BOOK 1	187
Spring plungers with hexagon socket and flattened thrust pin,		
stainless steel	BOOK 1	189
Spring plungers with hexagon socket and flattened thrust pin,		
stainless steel, LONG-LOK lock	BOOK 1	191
Spring plungers with hexagon socket and flattened thrust pin,		
steel	BOOK 1	181
Spring plungers with hexagon socket and flattened thrust pin,		
steel, LONG-LOK lock	BOOK 1	183

Index

Spring plungers with hexagon socket and POM thrust pin, LONG-LOK secured, stainless steel	BOOK 1	194
Spring plungers with hexagon socket and POM thrust pin, LONG-LOK secured, steel	BOOK 1	186
Spring plungers with hexagon socket and POM thrust pin, stainless steel	BOOK 1	192
Spring plungers with hexagon socket and POM thrust pin, steel	BOOK 1	184
Spring plungers with hexagon socket and thrust pin, long version	BOOK 1	179
Spring plungers with hexagon socket and thrust pin, LONG-LOK secured, stainless steel	BOOK 1	190
Spring plungers with hexagon socket and thrust pin, LONG-LOK secured, steel	BOOK 1	182
Spring plungers with hexagon socket and thrust pin, stainless steel	BOOK 1	188
Spring plungers with hexagon socket and thrust pin, steel	BOOK 1	180
Spring plungers with slot and ball, LONG-LOK secured, stainless steel	BOOK 1	167
Spring plungers with slot and ball, LONG-LOK secured, steel	BOOK 1	164
Spring plungers with slot and ball, stainless steel	BOOK 1	166
Spring plungers with slot and ball, steel	BOOK 1	163
Spring plungers with slot and ceramic ball, stainless steel	BOOK 1	165
Spring plungers with slot and POM ball, plastic	BOOK 1	165
Spring plungers with slot and stainless steel ball, plastic	BOOK 1	168
Spring plungers with slot and thrust pin, LONG-LOK secured, stainless steel	BOOK 1	173
Spring plungers with slot and thrust pin, LONG-LOK secured, steel	BOOK 1	171
Spring plungers with slot and thrust pin, stainless steel	BOOK 1	172
Spring plungers with slot and thrust pin, steel	BOOK 1	169
Spring plungers with status sensor	BOOK 1	170
Spring washers DIN 137 B	BOOK 1	1116
Springs for clamp straps	BOOK 1	1156
Sprocket sets	BOOK 2	477
Sprockets duplex 1 1/2“ x 1“ DIN ISO 606	BOOK 2	428, 463
Sprockets duplex 1 1/4“ x 3/4“ DIN ISO 606	BOOK 2	427, 462
Sprockets duplex 1“ x 17,02 mm DIN ISO 606	BOOK 2	426, 460-461
Sprockets duplex 1/2“ x 5/16“ DIN ISO 606	BOOK 2	423, 454-455
Sprockets duplex 3/4“ x 7/16“ DIN ISO 606	BOOK 2	425, 458-459
Sprockets duplex 3/8“ x 7/32“ DIN ISO 606	BOOK 2	422, 452-454
Sprockets duplex 5/8“ x 3/8“ DIN ISO 606	BOOK 2	424
Sprockets duplex 8.0 mm x 3.0 mm DIN ISO 606	BOOK 2	421, 450, 452
Sprockets single 1“ x 17.02 mm DIN ISO 606	BOOK 2	448-449
Sprockets single 1/2“ x 5/16“ DIN ISO 606	BOOK 2	417, 442-443
Sprockets single 1/2“ x 5/16“ DIN ISO 606, ready to install	BOOK 2	404-406
Sprockets single 1/2“ x 5/16“ stainless steel DIN ISO 606	BOOK 2	435
Sprockets single 1“ x 17.02 mm DIN ISO 606	BOOK 2	420
Sprockets single 1“ x 17.02 mm DIN ISO 606, ready to install	BOOK 2	413-415
Sprockets single 1“ x 17.02 mm stainless steel DIN ISO 606	BOOK 2	438
Sprockets single 3/4“ x 7/16“ DIN ISO 606	BOOK 2	446-447
Sprockets single 3/4“ x 7/16“ DIN ISO 606, ready to install	BOOK 2	410-412
Sprockets single 3/4“ x 7/16“ stainless steel DIN ISO 606	BOOK 2	437
Sprockets single 3/4” x 7/16” DIN ISO 606	BOOK 2	419
Sprockets single 3/8“ x 7/32“ DIN ISO 606, ready to install	BOOK 2	402-403
Sprockets single 3/8“ x 7/32“ DIN ISO 606	BOOK 2	416, 440-441
Sprockets single 3/8“ x 7/32“ stainless steel DIN ISO 606	BOOK 2	434
Sprockets single 5/8“ x 3/8“ DIN ISO 606	BOOK 2	444-445
Sprockets single 5/8“ x 3/8“ DIN ISO 606	BOOK 2	418
Sprockets single 5/8“ x 3/8“ DIN ISO 606, ready to install	BOOK 2	407-409
Sprockets single 5/8“ x 3/8“ stainless steel DIN ISO 606	BOOK 2	436
Sprockets triplex 1“ x 17,02 mm DIN ISO 606	BOOK 2	433, 472-474
Sprockets triplex 1/2“ x 5/16“ DIN ISO 606	BOOK 2	430, 466-467
Sprockets triplex 3/4“ x 7/16“ DIN ISO 606	BOOK 2	432, 470-471
Sprockets triplex 3/8“ x 7/32“ DIN ISO 606	BOOK 2	429, 464
Sprockets triplex 5/8“ x 3/8“ DIN ISO 606	BOOK 2	431, 468-469
Sprockets, duplex 5/8“ x 3/8“ DIN ISO 606	BOOK 2	456-457
Spur gears in steel, module 1 toothing milled, straight teeth, engagement angle 20°	BOOK 2	486-487
Spur gears in steel, module 1.5 toothing milled, straight teeth, engagement angle 20°	BOOK 2	488-489
Spur gears in steel, module 2 toothing milled, straight teeth, engagement angle 20°	BOOK 2	490-491
Spur gears in steel, module 2.5 toothing milled, straight teeth, engagement angle 20°	BOOK 2	492-493
Spur gears in steel, module 3 toothing milled, straight teeth, engagement angle 20°	BOOK 2	494-495
Spur gears in steel, module 4 toothing milled, straight teeth, engagement angle 20°	BOOK 2	496-497
Spur gears in steel, module 5 toothing milled, straight teeth, engagement angle 20°	BOOK 2	498-499
Spur gears in steel, module 6 toothing milled, straight teeth, engagement angle 20°	BOOK 2	500
Spur gears in steel, module 8 toothing milled, straight teeth, engagement angle 20°	BOOK 2	501
Spur gears, plastic, module 0.5 injection moulded, straight teeth, engagement angle 20°	BOOK 2	502-503
Spur gears, plastic, module 0.7 injection moulded, straight teeth, engagement angle 20°	BOOK 2	504-505
Spur gears, plastic, module 1 injection moulded, straight teeth, engagement angle 20°	BOOK 2	506-507
Spur gears, plastic, module 1.25 injection moulded, straight teeth, engagement angle 20°	BOOK 2	508-509
Spur gears, plastic, module 1.5 injection moulded, straight teeth, engagement angle 20°	BOOK 2	510-511
Spur gears, plastic, module 2 injection moulded, straight teeth, engagement angle 20°	BOOK 2	512-513
Spur gears, plastic, module 2.5 injection moulded, straight teeth, engagement angle 20°	BOOK 2	514-515
Spur gears, plastic, module 3 injection moulded, straight teeth, engagement angle 20°	BOOK 2	516-517
Square hollow profiles grey cast iron	BOOK 1	86
Stainless steel brakes for roller elements	BOOK 1	1304
Stainless steel jaw plates for precision vices	BOOK 2	1103
Standard inspection and test fixture elements	BOOK 2	1067
Star grips aluminium, similar to DIN 6336	BOOK 1	738-739
Star grips antistatic similar to DIN 6336	BOOK 1	754
Star grips grey cast iron, DIN 6336	BOOK 1	742
Star grips metal parts stainless steel, similar to DIN 6336	BOOK 1	750
Star grips quick-acting	BOOK 1	758
Star grips similar to DIN 6336	BOOK 1	743, 752-753
Star grips similar to DIN 6336, metal parts stainless steel	BOOK 1	744
Star grips stainless steel, similar to DIN 6336	BOOK 1	740-741
Star grips with extended collar	BOOK 1	749
Star grips with projecting steel bush	BOOK 1	746-747
Star grips with safety cable metal parts stainless steel, similar to DIN 6336	BOOK 1	751
Star grips with safety cable similar to DIN 6336	BOOK 1	756-757
Star grips, plastic with clamping force intensifier	BOOK 1	748
Star grips, plastic with protruding steel bush	BOOK 1	745
Status sensors, stainless steel with bracket for toggle clamps	BOOK 1	701
Step block sets	BOOK 1	150

Index

Step blocks	BOOK 1	150
Stepper motor	BOOK 2	1170-1171
Stepper motors with integrated positioning control	BOOK 2	1172-1175
Stop nuts stainless steel	BOOK 2	782
Stop screws	BOOK 1	214-215
Stop screws	BOOK 2	50
Stop sets	BOOK 2	1128
Stops adjustable	BOOK 1	213
Stops adjustable with end position feedback	BOOK 1	144
Strap hinges stainless steel with grease nipple	BOOK 2	916
Straps	BOOK 1	1286
Straps	BOOK 2	94
Studs	BOOK 1	1015
Studs DIN 6379	BOOK 1	1016-1017
Studs with screw-in stop for gluing in	BOOK 1	1169
Subplates Discs Profiles Angle plates Tombstones	BOOK 1	55
Subplates machined all sides grey cast iron	BOOK 1	70
Subplates, grey cast iron with pre-machined clamping faces	BOOK 1	66-67
Subplates, grey cast iron with T-slots	BOOK 1	68-69
Suction hoses LOC-LINE® Flexi 75	BOOK 2	1232
Suction hoses LOC-LINE® Flexi 75 antistatic	BOOK 2	1233
Supercraft soft faced hammer recoilless	BOOK 2	1248
Support bolts	BOOK 1	128
Support cylinders for workpieces with collar	BOOK 2	1051
Support element	BOOK 1	155
Support elements cylindrical	BOOK 1	151
Suspension brackets, steel for roller rails	BOOK 1	1308
Swing clamp pneumatic	BOOK 1	472-473
Swing clamps	BOOK 1	474, 489
Swing clamps mini	BOOK 1	471
Swing clamps mini, with cam lever	BOOK 1	470
Swing clamps pneumatic	BOOK 1	660
Swing screws	BOOK 1	668
Switched-mode power supplies for top-hat rail mounting	BOOK 2	1150-1151
Swivel adapter, antistatic plastic for profile slots	BOOK 1	1326
Swivel adapter, plastic for profile slots	BOOK 1	1325
Swivel and fixed castors electrically conductive, standard version	BOOK 2	1183
Swivel and fixed castors heavy-duty version 1196, 1199-1200	BOOK 2	1184, 1189,
Swivel and fixed castors medium-duty version	BOOK 2	1191, 1195
Swivel and fixed castors stainless steel for sterile areas	BOOK 2	1205
Swivel and fixed castors stainless steel, standard version	BOOK 2	1201
Swivel and fixed castors standard version 1188, 1190, 1198	BOOK 2	1182, 1186,
Swivel and fixed castors steel plate, electrically conductive standard version	BOOK 2	1187
Swivel and fixed castors steel plate, electrically conductive, heavy-duty version	BOOK 2	1185
Swivel and fixed castors steel plate, for sterile areas	BOOK 2	1204
Swivel and fixed castors steel plate, heavy-duty version	BOOK 2	1192
Swivel and fixed castors steel plate, with soft rubber tyres	BOOK 2	1193
Swivel and fixed castors welded steel heavy-duty version	BOOK 2	1197
Swivel angles	BOOK 2	170
Swivel bales	BOOK 1	1187
Swivel bales with axial ring	BOOK 1	1183
Swivel castors compact version	BOOK 2	1202-1203
Swivel castors with bolt hole stainless steel for sterile areas	BOOK 2	1206
Swivel castors, steel plate with soft rubber tyres and bolt hole	BOOK 2	1194
Swivel feet	BOOK 1	1068
Swivel feet ball joints with internal thread	BOOK 2	867
Swivel feet plates antistatic	BOOK 2	855
Swivel feet plates die-cast zinc or stainless steel	BOOK 2	858-859
Swivel feet plates extended die-cast zinc	BOOK 2	860
Swivel feet plates plastic	BOOK 2	856-857
Swivel feet plates stainless steel	BOOK 2	861
Swivel feet plates with vibration absorption	BOOK 2	863
Swivel feet steel	BOOK 2	846-847
Swivel feet threaded spindles steel or stainless steel	BOOK 2	866
Swivel feet with vibration absorption	BOOK 2	864
Swivel hold-down clamps mini, with cam lever	BOOK 1	560
Swivel hooks grade 10	BOOK 1	1198
Swivel pads	BOOK 1	140
Synchronisation sets	BOOK 2	88-89
T		**Page**
Talon grips	BOOK 1	518
Talon grips round	BOOK 1	519
Taper clamping bushes	BOOK 2	584-587
Taper cleaners for hollow shank tapers	BOOK 2	1250
Taper cleaners for Morse tapers	BOOK 2	1249
Taper cleaners for short tapers	BOOK 2	1249
Taper grips	BOOK 1	819-820
Taper grips fixed	BOOK 1	816
Taper grips revolving	BOOK 1	817
Tapered knobs	BOOK 1	774
Tapered roller bearing FAG single row	BOOK 2	672
Technical InFormation for Adjusting Nuts	BOOK 1	1150
Telescopic slides	BOOK 2	252
Telescopic slides double arrangement	BOOK 2	250-251
Telescopic slides Double-T form	BOOK 2	248-249
Telescopic slides S-form	BOOK 2	253
Telescopic slides, aluminium for side mounting, full extension, load capacity up to 300 kg	BOOK 2	246
Telescopic slides, stainless steel for side mounting, full extension, load capacity up to 80 kg	BOOK 2	230
Telescopic slides, stainless steel for side mounting, over-extension, load capacity up to 70 kg	BOOK 2	229
Telescopic slides, stainless steel for side mounting, over-extension, load capacity up to 90 kg	BOOK 2	232
Telescopic slides, stainless steel for side mounting, partial extension, load capacity up to 65 kg	BOOK 2	223
Telescopic slides, steel for side mounting full extension, load capacity up to 20 kg	BOOK 2	202
Telescopic slides, steel for side mounting, full extension, load capacity up to 100 kg	BOOK 2	233
Telescopic slides, steel for side mounting, full extension, load capacity up to 124 kg	BOOK 2	235
Telescopic slides, steel for side mounting, full extension, load capacity up to 160 kg	BOOK 2	236-237
Telescopic slides, steel for side mounting, full extension, load capacity up to 227 kg	BOOK 2	240-242
Telescopic slides, steel for side mounting, full extension, load capacity up to 272 kg	BOOK 2	244-245
Telescopic slides, steel for side mounting, full extension, load capacity up to 45 kg	BOOK 2	206-207
Telescopic slides, steel for side mounting, full extension, load capacity up to 50 kg	BOOK 2	208-213
Telescopic slides, steel for side mounting, over-extension, load capacity up to 100 kg	BOOK 2	234
Telescopic slides, steel for side mounting, over-extension, load capacity up to 160 kg	BOOK 2	238
Telescopic slides, steel for side mounting, over-extension, load capacity up to 55 kg	BOOK 2	220
Telescopic slides, steel for side mounting, over-extension, load capacity up to 60 kg	BOOK 2	221
Telescopic slides, steel for side mounting, over-extension, load capacity up to 68 kg	BOOK 2	224-226
Telescopic slides, steel for side mounting, over-extension, load capacity up to 70 kg	BOOK 2	227-228
Telescopic slides, steel for side mounting, over-extension, load capacity up to 82 kg	BOOK 2	231
Telescopic slides, steel for side mounting, partial extension both sides, load capacity up to 50 kg	BOOK 2	216-217

Index

Telescopic slides, steel for side mounting, partial extension, load capacity up to 50 kg	BOOK 2	214-215, 218-219
Telescopic slides, steel for side mounting, partial extension, load capacity up to 65 kg	BOOK 2	222
Telescopic slides, steel for surface mounting, partial extension both sides, load capacity up to 35 kg	BOOK 2	204-205
Tension lever	BOOK 1	827
Tension levers	BOOK 1	830
Tension levers external thread	BOOK 1	837
Tension levers external thread, stainless steel	BOOK 1	838
Tension levers flat	BOOK 1	829
Tension levers flat external thread	BOOK 1	843
Tension levers flat external thread, stainless steel	BOOK 1	844
Tension levers flat internal thread	BOOK 1	841
Tension levers flat internal thread, stainless steel	BOOK 1	842
Tension levers internal thread	BOOK 1	835
Tension levers internal thread, stainless steel	BOOK 1	836
Tension levers safety external thread	BOOK 1	840
Tension levers safety internal thread	BOOK 1	839
Tension levers stainless steel	BOOK 1	828
Tension pulleys	BOOK 2	391
Tension relief, plastic for energy chains, inner height 25 mm	BOOK 2	1142
Tension relief, plastic for energy chains, inner height 35 mm	BOOK 2	1145
Tension relief, plastic for energy chains, internal height 45 mm	BOOK 2	1148
T-grips	BOOK 1	927-928
T-grips stainless steel	BOOK 1	926
Thermoset wheels heat-resistant	BOOK 2	1213
Threaded clamping bushes	BOOK 1	393
Threaded insert, steel, self-tapping, type B	BOOK 1	1283
Threaded inserts	BOOK 1	1162
Threaded inserts reinforced	BOOK 1	1163
Threaded inserts reinforced internal thread, self-locking	BOOK 1	1166
Threaded inserts self-tapping with cutting bores	BOOK 1	1161
Threaded inserts self-tapping with cutting slot	BOOK 1	1159
Threaded inserts solid body	BOOK 1	1164
Threaded inserts with internal thread, self-locking	BOOK 1	1165
Threaded rods steel and stainless steel DIN 976-1	BOOK 1	1154-1155
Thrust pads	BOOK 1	1064, 1066
Thrust pads DIN 6311 enhanced	BOOK 1	1065
Thrust pads for power clamp	BOOK 1	571
Thrust pads with retaining pin	BOOK 1	1065
Thrust screws	BOOK 1	1053
Thrust screws LONG-LOK secured	BOOK 1	1055
Thrust screws neoprene	BOOK 1	598
Thrust screws stainless steel	BOOK 1	1054
Thrust screws with point	BOOK 1	1057
Thrust screws with radiused half-dog point	BOOK 1	1058
Thrust screws with thrust pad	BOOK 1	597
Thrust spindles	BOOK 1	1067
Thrust spindles spring mounted	BOOK 1	596
Thrust washers	BOOK 1	1220
Thrust washers	BOOK 2	653
Thrust washers plastic	BOOK 2	648
Tightening screws	BOOK 1	574
T-nuts	BOOK 1	1028
Toe clamps	BOOK 1	554
Toe clamps compact	BOOK 1	540
Toe clamps for T-slots	BOOK 1	517
Toggle clamps heavy duty version straight foot	BOOK 1	612
Toggle clamps heavy duty vertical	BOOK 1	611
Toggle clamps horizontal large version	BOOK 1	592
Toggle clamps horizontal with flat foot and adjustable clamping spindle	BOOK 1	678-679
Toggle clamps horizontal with flat foot and adjustable clamping spindle, stainless steel	BOOK 1	680, 682
Toggle clamps horizontal with horizontal foot	BOOK 1	592
Toggle clamps horizontal with push rod	BOOK 1	594
Toggle clamps horizontal with safety interlock with flat foot and adjustable clamping spindle	BOOK 1	681
Toggle clamps horizontal with safety interlock with flat foot and adjustable clamping spindle, stainless steel	BOOK 1	682
Toggle clamps horizontal with safety interlock with straight foot and adjustable clamping spindle	BOOK 1	685
Toggle clamps horizontal with safety interlock with straight foot and adjustable clamping spindle, stainless steel	BOOK 1	686
Toggle clamps horizontal with straight foot	BOOK 1	593
Toggle clamps horizontal with straight foot and adjustable clamping spindle	BOOK 1	683
Toggle clamps horizontal with straight foot and adjustable clamping spindle, stainless steel	BOOK 1	684
Toggle clamps Pneumatic clamps Accessories for clamps Latches Quarter-turn locks	BOOK 1	583
Toggle clamps variable horizontal with horizontal foot	BOOK 1	599
Toggle clamps variable vertical with horizontal foot	BOOK 1	600
Toggle clamps variable with thrust rod	BOOK 1	601
Toggle clamps vertical with angled foot	BOOK 1	590
Toggle clamps vertical with flat foot and adjustable clamping spindle	BOOK 1	688-689
Toggle clamps vertical with flat foot and adjustable clamping spindle, stainless steel	BOOK 1	690-691
Toggle clamps vertical with horizontal foot	BOOK 1	585
Toggle clamps vertical with horizontal foot and full clamping lever	BOOK 1	586
Toggle clamps vertical with horizontal foot, large version	BOOK 1	587
Toggle clamps vertical with safety interlock with flat foot and adjustable clamping spindle	BOOK 1	691-693
Toggle clamps vertical with safety interlock with flat foot and adjustable clamping spindle, stainless steel	BOOK 1	694-695
Toggle clamps vertical with safety interlock with straight foot and adjustable clamping spindle	BOOK 1	698
Toggle clamps vertical with safety interlock with straight foot and adjustable clamping spindle, stainless steel	BOOK 1	699
Toggle clamps vertical with straight foot	BOOK 1	588
Toggle clamps vertical with straight foot and adjustable clamping spindle	BOOK 1	696
Toggle clamps vertical with straight foot and adjustable clamping spindle, stainless steel	BOOK 1	697
Toggle clamps vertical with straight foot and full clamping lever	BOOK 1	589
Toggle clamps with push rod push-pull operation, for bracket mounting	BOOK 1	595
Toggle hook clamps and catch plate	BOOK 1	591
Toggle mini clamps	BOOK 1	593
Tolerance rings	BOOK 2	1222
Tombstone, grey cast iron, double-sided, for interchangeable subplates	BOOK 1	78
Tombstones cube grey cast iron	BOOK 1	92
Tombstones double-sided grey cast iron	BOOK 1	79
Tombstones, grey cast iron, double-sided, with pre-machined clamping faces	BOOK 1	74-75
Tombstones, grey cast iron, double-sided, with T-slots	BOOK 1	76-77
Tommy bars with fixed or sliding T-bar, DIN 6305 or DIN 6307	BOOK 1	725
Tongue for quarter-turn lock	BOOK 1	632
Toothed belt profile HTD 5M	BOOK 2	362
Toothed belt profile HTD 8M	BOOK 2	363
Toothed belt pulleys AT profile	BOOK 2	340-341
Toothed belt pulleys T profile	BOOK 2	338-339
Toothed belts AT profile	BOOK 2	358-359
Toothed belts by the meter AT profile	BOOK 2	360-361
Toothed belts by the meter T profile	BOOK 2	356-357
Toothed belts T profile	BOOK 2	353-355
Toothed pulleys profile HTD 5M	BOOK 2	342

Index

Toothed pulleys profile HTD 5M, for assembly with taper clamping bushes	BOOK 2	346
Toothed pulleys profile HTD 8M	BOOK 2	343-345
Toothed pulleys profile HTD 8M, for assembly with taper clamping bushes	BOOK 2	347-349
Torque grips	BOOK 1	1063
Torque grips precision version	BOOK 1	1059
Torque screws with ball thrust points	BOOK 1	1064
Torque screws with slot coupling	BOOK 1	1062
Torque screws with support pin	BOOK 1	1063
Torque screws with thrust point	BOOK 1	1062
Torque wrench for 5-axis clamping system	BOOK 2	1254
T-profiles machined all sides grey cast iron or aluminium	BOOK 1	83
Traction cone for internal clamping collet	BOOK 1	339
Trapezoidal thread flange nuts single-start, RH or LH thread	BOOK 2	691
Trapezoidal thread nuts with flange double-start, RH thread	BOOK 2	692
Trapezoidal thread nuts, hexagon single-start, RH or LH thread	BOOK 2	693
Trapezoidal thread nuts, round double-start, RH thread	BOOK 2	690
Trapezoidal thread nuts, round single-start, RH or LH thread	BOOK 2	688-689
Trapezoidal thread spindles Ball screw linear actuators Bearings units Splined shafts	BOOK 2	685
Trapezoidal thread spindles double-start, RH thread	BOOK 2	687
Trapezoidal thread spindles single-start, RH or LH thread	BOOK 2	686
Traverses fixed	BOOK 2	291
Traverses moveable	BOOK 2	292
Triangular grips	BOOK 1	942
Triangular grips with high collar	BOOK 1	943
Triangular torque grips	BOOK 1	1061
T-slot bolts DIN 787	BOOK 1	1018-1019
T-slot bolts DIN 787, 12.9	BOOK 1	1020
T-slot clamp	BOOK 1	527
T-slot clamp with cam	BOOK 1	529
T-slot clamps	BOOK 1	526, 528
T-slot keys	BOOK 1	368
T-slot tables	BOOK 2	84
T-thrust screws with fixed or sliding T-bar, DIN 6304 or DIN 6306	BOOK 1	726
Tube clamps base, aluminium	BOOK 2	1002, 1004
Tube clamps base, plastic	BOOK 2	1001, 1004
Tube clamps base, stainless steel	BOOK 2	1003
Tube clamps cross, aluminium	BOOK 2	991-992, 994-995
Tube clamps cross, plastic	BOOK 2	991, 994-995
Tube clamps cross, stainless steel	BOOK 2	993
Tube clamps flange, aluminium	BOOK 2	1006-1007, 1009
Tube clamps flange, plastic	BOOK 2	1005, 1009
Tube clamps flange, stainless steel	BOOK 2	1008
Tube clamps right-angle, aluminium	BOOK 2	1000
Tube clamps straight, plastic	BOOK 2	1010
Tube clamps swivel base, aluminium	BOOK 2	1020
Tube clamps swivel base, plastic	BOOK 2	1019
Tube clamps swivel base, sunken teeth, plastic	BOOK 2	1014
Tube clamps swivel half, raised teeth, plastic	BOOK 2	1012
Tube clamps swivel half, sunken teeth, plastic	BOOK 2	1011, 1013
Tube clamps swivel, aluminium	BOOK 2	1016, 1018
Tube clamps swivel, plastic	BOOK 2	1015, 1017
Tube clamps T-angle, aluminium	BOOK 2	997, 1000
Tube clamps T-angle, plastic	BOOK 2	996, 999
Tube clamps T-angle, stainless steel	BOOK 2	998
Tube connectors Tube clamps Tube joints Tubes Columns	BOOK 2	989
Tube end plugs	BOOK 2	1023
Tube inserts round with tapped bush	BOOK 2	881
Tube inserts square with tapped bush	BOOK 2	880
Tubular bubble levels with frame to screw on	BOOK 2	312
Tubular handles “Bighand”	BOOK 1	998-999
Tubular handles angled	BOOK 1	1002
Tubular handles oval, aluminium	BOOK 1	988
Tubular handles round, aluminium	BOOK 1	987
Turnbuckle nuts hexagonal DIN 1479	BOOK 1	1107
Turnbuckle nuts steel tube, closed form DIN 1478	BOOK 1	1106
Turnbuckles, steel, for chain clamp sets	BOOK 1	448
U		**Page**
Universal joints double with needle bearing, DIN 808	BOOK 2	628
Universal joints double with plain bearing, DIN 808	BOOK 2	626
Universal joints double with plain bearing, robust version DIN 808	BOOK 2	630
Universal joints single with needle bearing, DIN 808	BOOK 2	627
Universal joints single with plain bearing, DIN 808	BOOK 2	625
Universal joints single with plain bearing, robust version DIN 808	BOOK 2	629
U-profiles machined all sides grey cast iron or aluminium	BOOK 1	85
V		**Page**
V-belt pulleys, grey cast iron for mounting with taper clamping bushes	BOOK 2	364-369
V-belts DIN 2215	BOOK 2	370-378, 381, 383, 385, 387
V-belts DIN 7753	BOOK 2	380-388
V-block machined all sides extra wide, grey cast iron	BOOK 1	84
V-block machined all sides grey cast iron or aluminium	BOOK 1	84
Vent screws	BOOK 2	978
Vent screws brass	BOOK 2	981
Vent screws brass with check valve	BOOK 2	981
Vent screws with check valve	BOOK 2	980
Vent screws with check valve and dipstick	BOOK 2	984
Vent screws with dipstick	BOOK 2	983
Vent screws with splash guard	BOOK 2	979
Vertical bracket long	BOOK 2	161
Vertical bracket short	BOOK 2	160
Vertical stages	BOOK 2	162
Vertical stages with electronic position indicator	BOOK 2	163
Vice Clamping Technology	BOOK 2	1109
Vice jaws complete	BOOK 2	1116
W		**Page**
Washers for clamps steel or aluminium DIN 6340	BOOK 1	1121
Washers large OD DIN 9021	BOOK 1	1117
Washers medium DIN EN ISO 7089 A	BOOK 1	1114
Washers plastic captive	BOOK 1	1118
Wedge clamps	BOOK 1	541, 553
Wedge clamps double jaw faces serrated	BOOK 1	547
Wedge clamps jaw face smooth or serrated	BOOK 1	543
Wedge clamps jaw faces serrated	BOOK 1	545
Wedge clamps machinable	BOOK 1	542, 544, 546
Wedge lock washers DIN 25201	BOOK 1	1119
Wedge supports	BOOK 1	151
Weld-on D-rings	BOOK 1	1179
Wheels aluminium rims with injection-moulded tread	BOOK 2	1210
Wheels heavy-load wheel body welded	BOOK 2	1211
Wheels polyamide	BOOK 2	1211
Wheels polyamide heavy-duty version	BOOK 2	1212
Wheels polyamide with injection-moulded tread	BOOK 2	1208
Wheels rubber tyres on die-cast aluminium rims	BOOK 2	1208
Wheels rubber tyres on steel plate rims	BOOK 2	1207
Wing grips	BOOK 1	930, 939
Wing grips “Miniwing”	BOOK 1	935
Wing grips “Miniwing” antistatic	BOOK 1	937
Wing grips “Miniwing” with tapped through bush	BOOK 1	936
Wing grips antistatic	BOOK 1	934
Wing grips for hexagon socket screws	BOOK 1	724
Wing grips internal thread, stainless steel	BOOK 1	929
Wing grips one-sided	BOOK 1	938

Index

Wing grips with tapped through bush	BOOK 1	931
Wing nuts	BOOK 1	1097
Wing nuts narrow in Hygienic DESIGN	BOOK 1	932
Wing screws	BOOK 1	1096
Woodruff keys DIN 6888	BOOK 1	373
Workholding cubes, grey cast iron with pre-machined clamping faces	BOOK 1	88-89
Workholding cubes, grey cast iron with T-slots	BOOK 1	90-91
Workpiece support cylinders	BOOK 1	154
Workpiece supports	BOOK 1	153, 156-157
Workpiece supports adjustable	BOOK 1	152
Worm drive compact	BOOK 2	563
Worm drives	BOOK 2	560-562
Worm gears, right-hand centre distance 17 mm	BOOK 2	536-537
Worm gears, right-hand centre distance 22.62 mm	BOOK 2	538-539
Worm gears, right-hand centre distance 25 mm	BOOK 2	540-541
Worm gears, right-hand centre distance 31 mm	BOOK 2	542-543
Worm gears, right-hand centre distance 33 mm	BOOK 2	544-545
Worm gears, right-hand centre distance 35 mm	BOOK 2	546-547
Worm gears, right-hand centre distance 40 mm	BOOK 2	548-549
Worm gears, right-hand centre distance 50 mm	BOOK 2	550-551
Worm gears, right-hand centre distance 53 mm	BOOK 2	552-553
Worm gears, right-hand centre distance 63 mm	BOOK 2	554-555
Worm gears, right-hand centre distance 65 mm	BOOK 2	556-557
Worm gears, right-hand centre distance 80 mm	BOOK 2	558-559

Normen	Description	nlm	Book	Page
DIN 39	Machine handles fixed steel, DIN 39 Form E	06291	Book 1	810
	Machine handles fixed aluminium, DIN 39 Form E	06292	Book 1	811
	Machine handles, fixed, DIN 39 Form E, stainless steel	06293	Book 1	811
	Machine handles, fixed, DIN 39 Form E, stainless steel	06309-01	Book 1	811
DIN 39 similar	Machine handles fixed straight form, similar to DIN 39	06311	Book 1	814
	Machine handles fixed steel, similar to DIN 39	06290	Book 1	810
DIN 98 similar	Machine handles revolving similar to DIN 98 Form E, steel	06308	Book 1	812
	Machine handles revolving steel, similar to DIN 98	06309	Book 1	812
	Machine handles revolving steel, similar to DIN 98	06310	Book 1	814
	Machine handles revolving straight form, similar to DIN 98	06312	Book 1	815
DIN 99	Levers 20° DIN 99	06330	Book 1	826
DIN 137 B	Spring washers DIN 137 B	07304	Book 1	1116
DIN 172	Drill bushes flanged DIN 172	08910	Book 1	1225
DIN 173	Shoulder screws flathead for DIN 173 drill bushes	08927	Book 1	1228
	Drill bushes push-in DIN 173	08920	Book 1	1226
DIN 173-1	Drill bushes push-in DIN 173-1	08920	Book 1	1227
	Drill bush clamps DIN 173-1	08926	Book 1	1228
DIN 179	Drill bushes cylindrical DIN 179	08900	Book 1	1224
DIN 315 similar	Wing nuts	07200	Book 1	1097
DIN 316 similar	Wing screws	07199	Book 1	1096
DIN 319	KBall knobs stainless steel or aluminium DIN 319	06247	Book 1	771
DIN 319 enhanced	Ball knobs smooth DIN 319 enhanced	06250	Book 1	772
	Ball knobs thermoplastic DIN 319 enhanced	06247	Book 1	770
DIN 439	Hexagon nuts thin type DIN 439	07212	Book 1	1099
DIN 444 B	Eye bolts DIN 444, Form B	07180	Book 1	1093
DIN 464	Knurled screws high form steel and stainless steel, DIN 464	06090	Book 1	710
DIN 466	Knurled nuts high steel and stainless steel, DIN 466	06110	Book 1	720
DIN 467	Knurled nuts flat steel and stainless steel, DIN 467	06120	Book 1	720
DIN 468	Crank handles offset similar to DIN 468	06480	Book 1	887
DIN 469	Crank handles straight similar to DIN 469	06490	Book 1	888
DIN 471	Circlips for shafts DIN 471	07330	Book 1	1123
DIN 472	Circlips for bores DIN 472	07331	Book 1	1124
DIN 508 enhanced	Nuts for T-slots DIN 508 enhanced	07060	Book 1	1021
DIN 551	Grub screws DIN 551	07630	Book 1	1152
DIN 580	Ring bolts DIN 580	07680	Book 1	1171
DIN 580 similar	Ring bolts similar to DIN 580	07680-01	Book 1	1172
DIN 582	Ring nuts DIN 582	07690	Book 1	1173
DIN 582 similar	Ring nuts similar to DIN 582	07690-01	Book 1	1174
DIN 609 similar	Shoulder screws with hexagon head similar to DIN 609	07535	Book 1	1139
DIN 626	Deep groove ball bearings stainless steel, DIN 626	23800-01	Book 2	661
DIN 653	Knurled screws low head steel and stainless steel, DIN 653	6089	Book 1	709
DIN 705	Shaft collars set screw DIN 705, steel	07800	Book 1	1204
	Shaft collars set screw DIN 705, stainless steel	07800	Book 1	1206
DIN 787	T-slot bolts DIN 787	07040	Book 1	1018
	T-slot bolts DIN 787, 12.9	07040	Book 1	1020
DIN 808	Universal joints single with plain bearing, DIN 808	23403	Book 2	625
	Universal joints double with plain bearing, DIN 808	23404	Book 2	626
	Universal joints single with needle bearing, DIN 808	23406	Book 2	627
	Universal joints double with needle bearing, DIN 808	23407	Book 2	628
	Universal joints single with plain bearing, robust version DIN 808	23409	Book 2	629
	Universal joints double with plain bearing, robust version DIN 808	23410	Book 2	630
DIN 878	Dial gauges DIN 878	32540	Book 2	1065
DIN 906	Screw plugs with hexagon socket DIN 906, tapered thread	28013	Book 2	967
DIN 908	Screw plugs with collar and hexagon socket DIN 908	28014	Book 2	968
DIN 910	Screw plugs hex head with collar DIN 910	28016	Book 2	969
DIN 912 / DIN EN ISO 4762	Socket head screws full thread, DIN 912 / DIN EN ISO 4762	07159	Book 1	1069
	Socket head screws DIN 912 / DIN EN ISO 4762, steel or stainless steel	07160	Book 1	1070
	Socket head screws DIN 912/DIN EN ISO 4762	07160	Book 1	1072
	Socket head screws DIN 912 / EN ISO 4762, LONG-LOK secured	07160	Book 1	1073
DIN 913	Grub screws with flat point hexagon socket DIN 913	07165	Book 1	1076

Normen	Description	nlm	Book	Page
DIN 914 / DIN EN ISO 4027	Grub screw with hexagon socket and pointed end DIN 914 / DIN EN ISO 4027	07166	Book 1	1077
DIN 923	Shoulder screws with slotted flat head DIN 923	07530	Book 1	1136
DIN 931 / DIN EN ISO 4014	Hexagon head bolts DIN 931 / DIN EN ISO 4014 / DIN EN 24014	07170	Book 1	1078
DIN 933	Hexagon head bolts DIN 933	07171	Book 1	1084
DIN 934 / DIN EN ISO 4032	Hexagon nuts DIN 934 / DIN EN ISO 4032 / DIN EN 24032	07210	Book 1	1098
DIN 950	Handwheels DIN 950, grey cast iron	06271	Book 1	790
	Handwheels DIN 950, stainless steel	06274	Book 1	794
	Handwheels DIN 950, aluminium	06273	Book 1	792
DIN 950 similar	Handwheels disc similar to DIN 950, aluminium	06279	Book 1	806
DIN 976-1	Threaded rods steel and stainless steel DIN 976-1	07640	Book 1	1154
DIN 980	Hexagon nuts with thread lock DIN 980	07215	Book 1	1102
DIN 981	Slotted round nuts, steel or stainless steel, DIN 981	07215	Book 1	1144
DIN 982 / DIN 982 similar	Hexagon nuts with polyamide thread lock high type, DIN 982 / stainless steel similar to DIN 982	07213	Book 1	1100
DIN 985	Hexagon nuts with polyamide thread lock thin type, DIN 985	07214	Book 1	1101
DIN 988	Shim washers DIN 988	07522	Book 1	1135
DIN 1283	DIN 1283 grease guns	97990-11	Book 2	1288
DIN 1283 similar	Grease guns, one-hand operation, similar to DIN 1283	97990-12	Book 2	1289
DIN 1478	Turnbuckle nuts steel tube, closed form DIN 1478	07221	Book 1	1106
DIN 1479	Turnbuckle nuts hexagonal DIN 1479	07222	Book 1	1107
DIN 1587 similar	Hexagon domed cap nuts similar to DIN 1587	07280	Book 1	1112
DIN 1804	Slotted round nuts DIN 1804	07590	Book 1	1142
DIN 1810A enhanced	Hook wrench with lug DIN 1810A enhanced	96650	Book 2	1252
DIN 2079	Carrier keys DIN 2079	03290	Book 1	374
DIN 2215	V-belts DIN 2215	22071	Book 2	370
DIN 3133	Latch stainless steel DIN 3133	05530-05	Book 1	614
DIN 3404	Grease nipples button head DIN 3404	97944	Book 2	1276
DIN 3405	Grease nipples flush type, DIN 3405	97942	Book 2	1275
DIN 3760	Grease nipples flush type, DIN 3405	23915	Book 2	681
DIN 5406	Locking plate steel or stainless steel DIN 5406	07590-02	Book 1	1146
DIN 6303	Knurled nuts steel and stainless steel, DIN 6303	06010	Book 1	704
DIN 6304, 6306	T-thrust screws with fixed or sliding T-bar, DIN 6304 or DIN 6306	06150	Book 1	726
DIN 6305, 6307	Tommy bars with fixed or sliding T-bar, DIN 6305 or DIN 6307	06140	Book 1	725
DIN 6310	Snapper catch with spring DIN 6310	07560	Book 1	1140
DIN 6311 enhanced	Thrust pads DIN 6311 enhanced	07140	Book 1	1065
DIN 6314	Clamp straps DIN 6314 straight, steel or aluminium	04080	Book 1	425
DIN 6315	Clamp straps open U DIN 6315, steel or aluminium	04110	Book 1	430
DIN 6315 C	Clamp straps open U DIN 6315 C, round pin, steel or aluminium	04150	Book 1	434
DIN 6316	Clamp straps gooseneck DIN 6316 wide, steel or aluminium	04090	Book 1	428
DIN 6319-10/01	Spherical washers DIN 6319, edition 10/01	07420	Book 1	1132
DIN 6320 (1971)	Feet with threaded pin, DIN 6320 (Edition 1971)	02030	Book 1	126
DIN 6321 (1973)	Locating pins and rest pads DIN 6321 (Issue 1973)	02020	Book 1	119
DIN 6321 similar	Locating pins ceramic similar to DIN 6321	02020-01	Book 1	116
DIN 6323	Slot keys loose DIN 6323	03260	Book 1	370
DIN 6325	Ceramic dowel pins similar to DIN 6325	03320-01	Book 1	376
DIN 6325	Cylindrical pins DIN 6325	03320	Book 1	376
DIN 6330 enhanced	Hexagon nuts height 1.5xD, DIN 6330 enhanced	07260	Book 1	1110
DIN 6331 enhanced	Hexagon nuts with collar height 1.5xD, DIN 6331 enhanced	07240	Book 1	1108
DIN 6332	Grub screws with thrust point DIN 6332	07120	Book 1	1056
DIN 6335	Palm grips grey cast iron DIN 6335	06160	Book 1	732
	Palm grips plastic coated grey cast iron, DIN 6335	06161	Book 1	733
DIN 6335 similar	Palm grips aluminium, similar to DIN 6335	06156	Book 1	728
	Palm grips stainless steel, similar to DIN 6335	06158	Book 1	731
	Palm grips similar to DIN 6335	06180	Book 1	734
	Palm grips similar to DIN 6335 metal parts stainless-steel	06181	Book 1	735
DIN 6336	Star grips grey cast iron, DIN 6336	06200	Book 1	742
DIN 6336 similar	Star grips aluminium, similar to DIN 6336	06192	Book 1	738
	Star grips stainless steel, similar to DIN 6336	06194	Book 1	741
	Star grips similar to DIN 6336	06208	Book 1	743
	Star grips similar to DIN 6336	06220	Book 1	752
	Star grips similar to DIN 6336, metal parts stainless steel	06209	Book 1	744

Normen	Description	nlm	Book	Page
DIN 6336 similar	Star grips metal parts stainless steel, similar to DIN 6336	06212	Book 1	750
	Star grips with safety cable metal parts stainless steel, similar to DIN 6336	06212	Book 1	751
	Star grips antistatic similar to DIN 6336	06220	Book 1	754
	Star grips with safety cable similar to DIN 6336	06220	Book 1	757
DIN 6337	Ball handles DIN 6337	06420	Book 1	847
DIN 6340	Washers for clamps steel or aluminium DIN 6340	07320	Book 1	1121
DIN 6346	Parallel blocks pair DIN 6346	03200	Book 1	366
DIN 6348	Base plates DIN 6348	08580	Book 1	1222
DIN 6348 enhanced	Drilling plates DIN 6348 enhanced	08570	Book 1	1221
DIN 6371	C-washers captive DIN 6371	07520	Book 1	1134
DIN 6372 enhanced	C-washers DIN 6372 enhanced	07380	Book 1	1130
DIN 6379	Studs DIN 6379	07030	Book 1	1016
DIN 6796	Conical spring washers DIN 6796	07303	Book 1	1115
DIN 6799	Circlips E-type DIN 6799	07332	Book 1	1125
DIN 6885 A	Parallel key, ceramic similar to DIN 6885 A	03288-01	Book 1	372
DIN 6885 A	Parallel keys DIN 6885 A	03288	Book 1	371
DIN 6888	Woodruff keys DIN 6888	03289	Book 1	373
DIN 6912	Socket head screws low head DIN 6912	07161	Book 1	1075
DIN ISO 7379 similar	Shoulder screws similar to DIN ISO 7379	07534	Book 1	1138
DIN ISO 7753	V-belts DIN 7753	22071-02	Book 2	380
DIN 9021	Washers large OD DIN 9021	07305	Book 1	1117
DIN 9832	Retaining clips DIN 9832	23682	Book 2	644
DIN 9834/ ISO 9448	Guide bushes DIN 9834 / ISO 9448, bronze, maintenance-free with collar	23681	Book 2	643
DIN 11024 similar	R-clips similar to DIN 11024	07337	Book 1	1127
DIN 25201	Wedge lock washers DIN 25201	07310	Book 1	1119
DIN 69002 similar	Elastomer dog couplings with conical hub and clamping ring (similar to DIN 69002)	23021	Book 2	577
DIN 69051-1	Ball screw linear actuators rolled, with flange nut DIN 69051 Part 5	24055	Book 2	699
DIN 70852	Slotted round nuts, steel, DIN 70852	07590-05	Book 1	1148
DIN 71412	Grease nipples conical head DIN 71412	97940	Book 2	1272
DIN 71752	Clevis joints with snap-in pin DIN 71752	27620	Book 2	791
	Snap-in pins for DIN 71752 clevis joints	27621	Book 2	792
	Clevis joints stainless steel DIN 71752	27622	Book 2	796
	Clevis joints DIN 71752	27624	Book 2	797
DIN 71802	Ball joints DIN 71802	27650	Book 2	811
DIN 71802 similar	Axial joints similar to DIN 71802	27665	Book 2	816
DIN 71803	Ball studs DIN 71803 for DIN 71802 angle joints	27656	Book 2	813
DIN 71805	Ball seats for ball joints DIN 71805	27655	Book 2	812
	Circlips for ball seats DIN 71805	27660	Book 2	815
DIN 7979 similar	Ceramic dowel pins with female thread similar to DIN 7979	03325-01	Book 1	377
DIN EN 1661	Hexagon nuts with flange EN 1661	07217	Book 1	1104
DIN EN 1665	Hexagon head bolts with flange EN 1665	07172	Book 1	1086
DIN EN ISO 1234	Split pins EN ISO 1234	07336	Book 1	1126
DIN EN ISO 7089 A	Washers medium DIN EN ISO 7089 A	07300	Book 1	1114
DIN EN ISO 7380	Button head screws EN ISO 7380	07174	Book 1	1088
DIN EN ISO 8735	Cylindrical pins with internal thread DIN EN ISO 8735	03325	Book 1	377
DIN EN ISO 10642	Screws with countersunk head hexagon socket DIN EN ISO 10642	07175	Book 1	1090
DIN EN 16983	Disc springs DIN EN 16983	07360	Book 1	1128
DIN ISO 606	Roller chains single DIN ISO 606, curved link plate	22200	Book 2	394
	Links DIN ISO 606	22200	Book 2	395
	Roller chains duplex DIN ISO 606, curved link plate	22201	Book 2	396
	Connecting links duplex DIN ISO 606	22201	Book 2	397
	Roller chains triplex DIN ISO 606, curved link plate	22202	Book 2	398
	Connecting links triplex DIN ISO 606	22202	Book 2	398
	Roller chains single DIN ISO 606, straight link plate	22208	Book 2	399
	Links DIN ISO 606	22208	Book 2	399
	Roller chains single stainless steel DIN ISO 606, curved link plate	22212	Book 2	400
	Links stainless steel DIN ISO 606	22212	Book 2	400
	Roller chain duplex, stainless steel DIN ISO 606, curved link plate	22213	Book 2	401
	Connecting links duplex, stainless steel DIN ISO 606	22213	Book 2	401
	Sprockets single 1/2“ x 5/16“ DIN ISO 606, ready to install	22250	Book 2	404

Normen	Description	nlm	Book	Page
DIN ISO 606	Sprockets single 1“ x 17.02 mm DIN ISO 606, ready to install	22250	Book 2	413
	Sprockets single 3/4“ x 7/16“ DIN ISO 606, ready to install	22250	Book 2	410
	Sprockets single 3/8“ x 7/32“ DIN ISO 606, ready to install	22250	Book 2	402
	Sprockets single 5/8“ x 3/8“ DIN ISO 606, ready to install	22250	Book 2	407
	Sprockets single 1/2“ x 5/16“ DIN ISO 606	22252	Book 2	417
	Sprockets single 1“ x 17.02 mm DIN ISO 606	22252	Book 2	420
	Sprockets single 3/4” x 7/16” DIN ISO 606	22252	Book 2	419
	Sprockets single 3/8“ x 7/32“ DIN ISO 606	22252	Book 2	416
	Sprockets single 5/8“ x 3/8“ DIN ISO 606	22252	Book 2	418
	Sprockets duplex 8.0 mm x 3.0 mm DIN ISO 606	22253	Book 2	421
	Sprockets duplex 3/8“ x 7/32“ DIN ISO 606	22253	Book 2	422
	Sprockets duplex 1/2“ x 5/16“ DIN ISO 606	22253	Book 2	423
	Sprockets duplex 5/8“ x 3/8“ DIN ISO 606	22253	Book 2	424
	Sprockets duplex 3/4“ x 7/16“ DIN ISO 606	22253	Book 2	425
	Sprockets duplex 1“ x 17,02 mm DIN ISO 606	22253	Book 2	426
	Sprockets duplex 1 1/4“ x 3/4“ DIN ISO 606	22253	Book 2	427
	Sprockets duplex 1 1/2“ x 1“ DIN ISO 606	22253	Book 2	428
	Sprockets triplex 3/8“ x 7/32“ DIN ISO 606	22254	Book 2	429
	Sprockets triplex 1/2“ x 5/16“ DIN ISO 606	22254	Book 2	430
	Sprockets triplex 5/8“ x 3/8“ DIN ISO 606	22254	Book 2	431
	Sprockets triplex 3/4“ x 7/16“ DIN ISO 606	22254	Book 2	432
	Sprockets triplex 1“ x 17,02 mm DIN ISO 606	22254	Book 2	418
	Sprockets single 1/2“ x 5/16“ stainless steel DIN ISO 606	22255	Book 2	435
	Sprockets single 1“ x 17.02 mm stainless steel DIN ISO 606	22255	Book 2	438
	Sprockets single 3/4“ x 7/16“ stainless steel DIN ISO 606	22255	Book 2	437
	Sprockets single 3/8“ x 7/32“ stainless steel DIN ISO 606	22255	Book 2	434
	Sprockets single 5/8“ x 3/8“ stainless steel DIN ISO 606	22255	Book 2	436
	Sprockets single 1/2“ x 5/16“ DIN ISO 606	22264	Book 2	442
	Sprockets single 1“ x 17.02 mm DIN ISO 606	22264	Book 2	448
	Sprockets single 3/4“ x 7/16“ DIN ISO 606	22264	Book 2	446
	Sprockets single 3/8“ x 7/32“ DIN ISO 606	22264	Book 2	440
	Sprockets single 5/8“ x 3/8“ DIN ISO 606	22264	Book 2	444
	Sprockets duplex 8.0 mm x 3.0 mm DIN ISO 606	22265	Book 2	450
	Sprockets duplex 3/8“ x 7/32“ DIN ISO 606	22265	Book 2	452
	Sprockets duplex 1/2“ x 5/16“ DIN ISO 606	22265	Book 2	454
	Sprockets, duplex 5/8“ x 3/8“ DIN ISO 606	22265	Book 2	456
	Sprockets duplex 3/4“ x 7/16“ DIN ISO 606	22265	Book 2	458
	Sprockets duplex 1“ x 17,02 mm DIN ISO 606	22265	Book 2	460
	Sprockets duplex 1 1/4“ x 3/4“ DIN ISO 606	22265	Book 2	462
	Sprockets duplex 1 1/2“ x 1“ DIN ISO 606	22265	Book 2	463
	Sprockets triplex 3/8“ x 7/32“ DIN ISO 606	22266	Book 2	464
	Sprockets triplex 1/2“ x 5/16“ DIN ISO 606	22266	Book 2	466
	Sprockets triplex 5/8“ x 3/8“ DIN ISO 606	22266	Book 2	468
	Sprockets triplex 3/4“ x 7/16“ DIN ISO 606	22266	Book 2	470
	Sprockets triplex 1“ x 17,02 mm DIN ISO 606	22266	Book 2	472
	Glide rails PE-UHMW for roller chains DIN ISO 606	22282	Book 2	483
	Glide rails PE-UHMW for roller chains DIN ISO 606 for C profiles	22282-05	Book 2	484
DIN ISO 6432	Pneumatic round cylinders DIN ISO 6432, double-acting with magnetic piston	07534	Book 1	1336-1337
DIN ISO 7379 similar	Shoulder screws similar to DIN ISO 7379	07534	Book 1	1138
DIN ISO 12240-1	Spherical bearings K/E series DIN ISO 12240-1	27632-02	Book 2	810
DIN ISO 15552	Pneumatic cylinders DIN ISO 15552 standard cylinder	12000	Book 2	1331-1332
DIN ISO 21287	Pneumatic compact cylinders DIN ISO 21287, double-acting with magnetic piston	12001	Book 2	1335
ISO 8752	Roll dowel heavy duty ISO 8752	03315	Book 1	375
ISO 10243	Compression springs ISO 10243, light load	26000	Book 2	738
	Compression springs ISO 10243, moderate load	26001	Book 2	740
	Compression springs ISO 10243, heavy load	26002	Book 2	742
	Compression springs ISO 10243, very heavy load	26003	Book 2	744

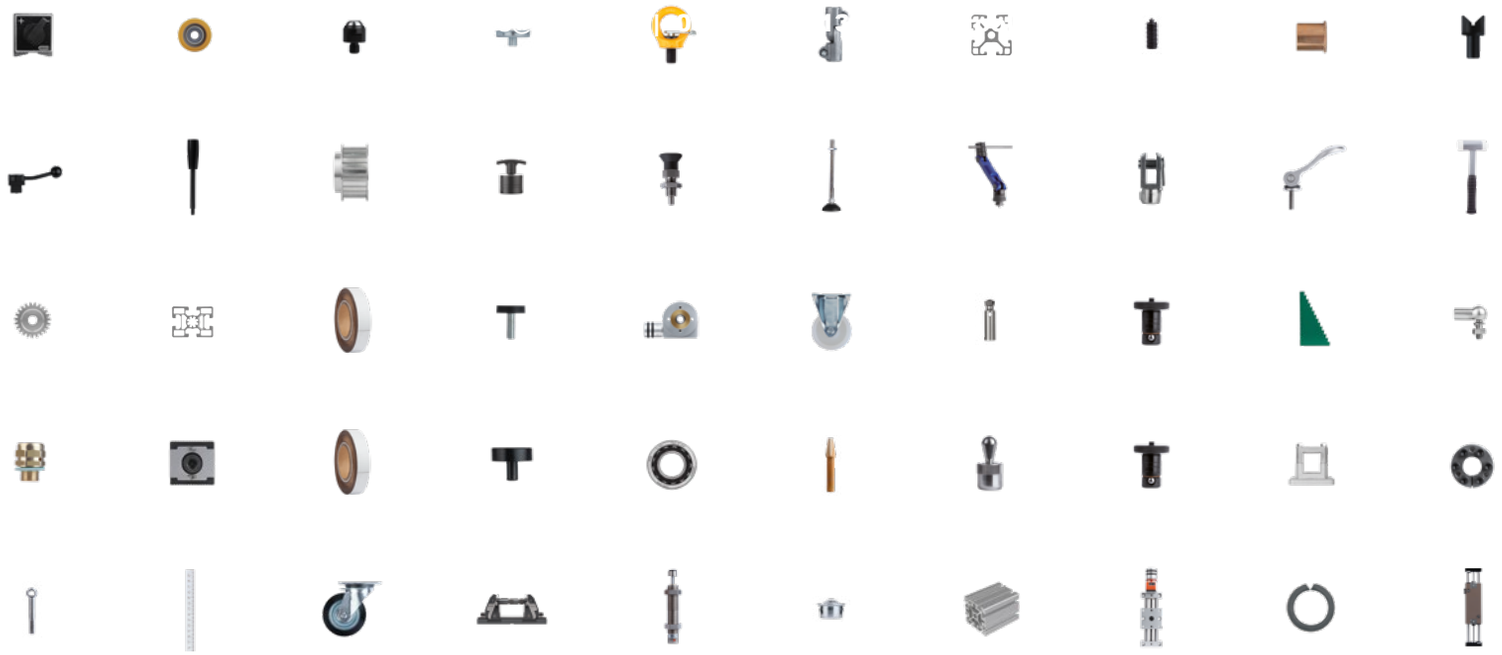

WE10ENCAT2201

www.norelem.com